SKSSWEDEN

FLEXIBLE COUPLINGS - RIGID COUPLINGS

Up to 130.000 Nm of torque and 205 mm bores

(BACKLASH FREE)

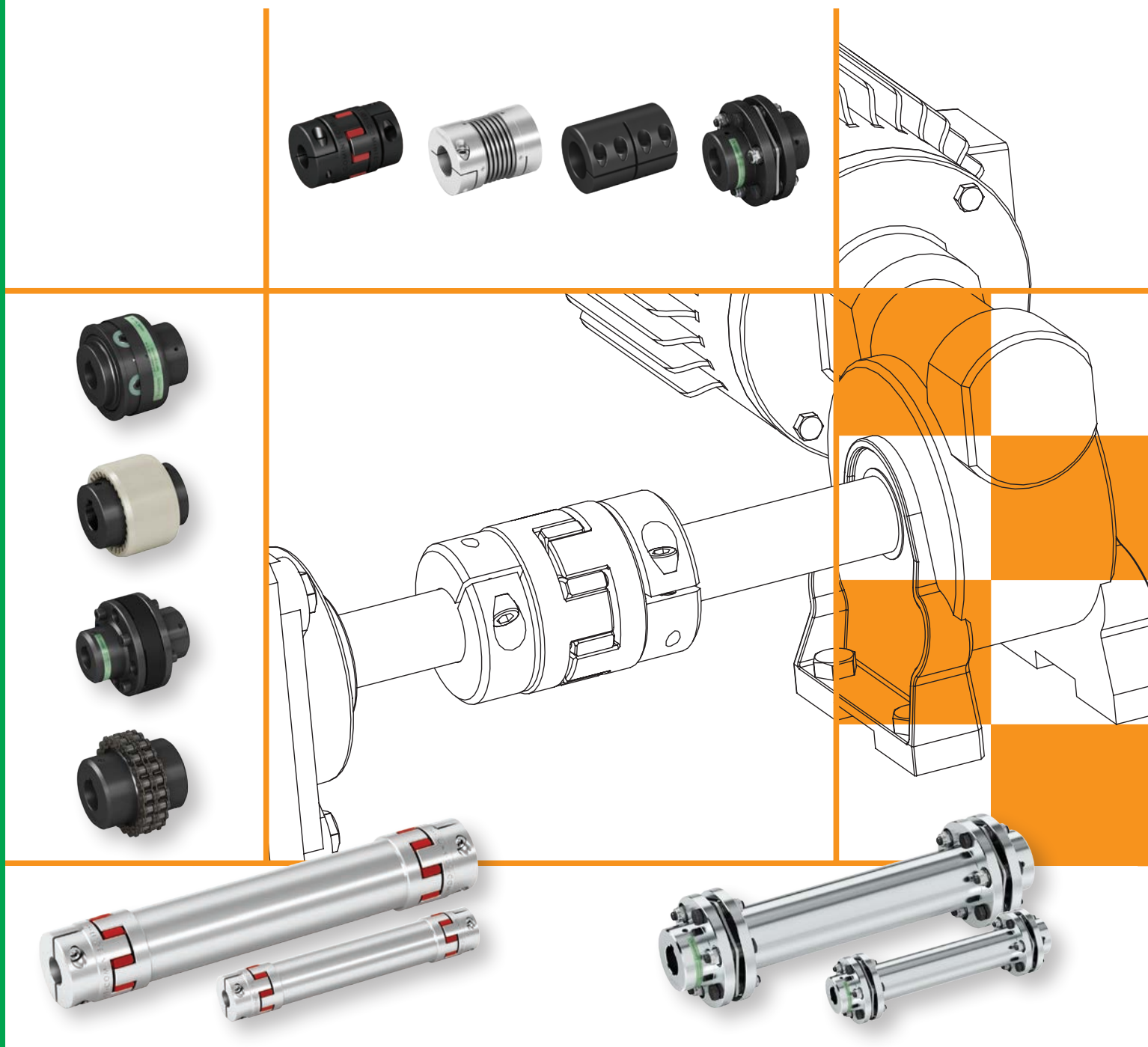

ComInTec®
Technology for Safety

www.comintec.it

Edition 10/2014

FLEXIBLE COUPLINGS - RIGID COUPLINGS (BACKLASH FREE): introduction

The aim of the flexible coupling is to transfer motion between two shafts on the same axis whilst accounting for possible misalignments.
We have various styles of flexible couplings suitable for a wide range of applications.
The quality of the materials used, the careful design and the precision in manufacturing ensure long lasting high performance, safety and reliability for even the most complex applications.

Strengths of our Models:

- Available in fully turned steel, aluminium or stainless steel.
- Good reliability.
- Different customization possibilities.
- Wide selection.
- Highly accurate manufacturing.
- Optimum protection against environmental conditions.
- Competitive pricing without sacrificing quality.
- "Made in Italy" with certified quality.

Our main product ranges:

- "RIGID COUPLINGS (BACKLASH FREE)": for connections when high precision and high transmission torques are required.
- "ELASTOMERIC COUPLINGS": for connection between misaligned shafts with the need to absorb vibrations.

DISC COUPLING "GTR"

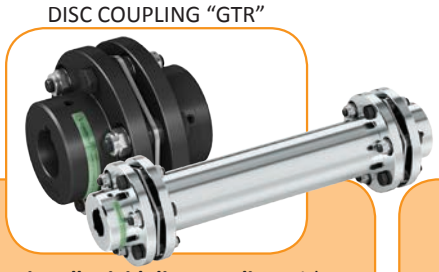

Torsionally rigid disc coupling with angular backlash free transfer of motion. Transmission and maximum flexibility in operation.
Available with personalized spacer.
Max torque 130.000 Nm - Max bore ø205 mm. 7

RIGID COUPLING "GRI"

Rigid coupling, in steel, suitable for shaft connections with good alignment. Available in one or two sections.
Max torque 860 Nm - Max bore ø50 mm. 17

BELLOW COUPLING "GSF"

Bellow coupling in aluminium with high torsional rigidity. Backlash free, low inertia and high reliability.
Max torque 300 Nm - Max bore ø45 mm. 21

BACKLASH FREE JAW COUPLING "GAS/SG"

Backlash free jaw coupling.
Available with a range of hub connections, elastomeric elements with varied hardnesses and personalized spacer.
Max torque 2.080 Nm - Max bore ø80 mm. 25

JAW COUPLING "GAS"

Elastomeric jaw coupling, good vibration dampening properties. Available with different types of elastomeric element.
Max torque 9.600 Nm - Max bore ø130 mm. 30

COMPACT ELASTIC COUPLING "GEC"

Compact elastic coupling, protected from environmental conditions. Fast maintenance possible without the need to move the shafts.
Max torque 35.000 Nm - Max bore ø180 mm. 39

GEAR COUPLING "GD"

Gear coupling without wear due to the polyamide sleeve, suitable for high axial misalignments.
Max torque 5.000 Nm - Max bore ø125 mm. 43

FLEXIBLE COUPLING "GF"

Flexible coupling with compact dimensions, suited for applications where high shaft misalignments are present. Maintenance without the need to move the shafts.
Max torque 5.100 Nm - Max bore ø85 mm. 47

CHAIN COUPLING "GC"

Chain coupling, simple, economic and easy to assemble.
Suitable for dry and dusty environments.
Max torque 8.000 Nm - Max bore ø110 mm. 49

FLEXIBLE COUPLINGS - RIGID COUPLINGS (BACKLASH FREE): Introduction

SELECTION GUIDE

TECHNICAL CHARACTERISTICS	GTR page 7	.../DBSE page 12	GRI page 17	GSF page 21	GAS/SG page 25	GAS page 30	GAS/SG-AL page 33	GAS-AL page 33	.../DBSE page 34	GEC page 39	GD page 43	GF page 47	GC page 49
Manufactured in turned steel	■	■	■		■	■				■	■	■	■
Manufactured in aluminium				■			■	■	■				
Elastomeric					■	■	■	■	■	■		■	
Medium torsional rigidity										■	■		
High torsional rigidity	■	■		■	■		■						
Completely rigid			■										
Clutch connection					■	■	■	■	■		■		
Compact dimensions			■	■	■	■	■	■		■	■		
Modular system	■			■	■	■	■	■		■	■	■	
Reduced inertia				■			■	■	■				
Statically balanced	■	■		■	■	■	■	■		■	■	■	■
Electric insulation between parts					■		■		■				
Available with customized spacers		■		■					■				
Assembly with **torque limiters (safety couplings)** possible.	■			■	■	■				■		■	■
ADVANTAGES AND BENEFITS													
High transmittable torque	■	■	■							■			
Maintenance free	■	■	■	■							■		■
Economic solution			■	■		■		■			■		■
Suitable for frequent reversal of drive	■	■		■	■		■			■			
Suitable for high temperatures (>150°C)			■	■						■			■
Maintenance without moving the coupling	■	■								■		■	■
Silent during transmission			■		■	■	■	■	■	■		■	
Vibration dampening					■	■	■	■	■			■	
Suitable for high speeds	■				■		■				■		
Simple and fast assembly					■	■	■	■	■		■		■
ATEX conformity (on request)					■	■							
High compensation for misalignments						■		■	■			■	
Average compensation for misalignments		■								■	■		■
Low compensation for misalignments	■			■	■		■						
APPLICATIONS													
CNC and precision machines	■			■	■		■						
Servomotors, linear guides, transducers		■		■	■		■		■				
Food and chemical sectors	■				■	■	■	■		■			
Textile and printing machines	■	■								■			
Pumps, compressors, Pelton turbines					■	■				■	■		
Conveyor belts						■		■	■			■	■
Solar trackers					■		■		■				
Speedometer dynamos, encoders				■			■						
Packing machines					■	■	■	■					
Extruders, mixers and agitators										■			
Farm machines, earth-moving equipment											■	■	■
Pressings, Rolling mills										■			
Test-beds	■									■			
Motion control			■	■			■						

FLEXIBLE COUPLINGS - RIGID COUPLINGS (BACKLASH FREE): hub connection types

Type A — Plain bored H7 hub with set screw.

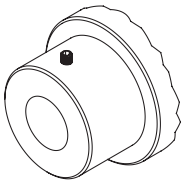

An economic and quick solution for low torque.

Type A1 — H7 bore with keyway and set screw.

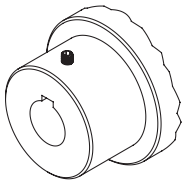

Standard solution on the hubs shown in the catalogue for horizontal assembling.

Type A2 — Splined bore with set screw.

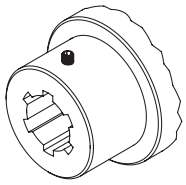

Recommended solution in the case of hard transmission.

Type B — Single split clamp hub with plain H7 bore.

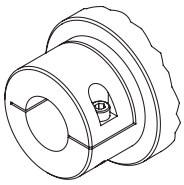

Reduction of angular backlash without change to the overall dimensions.

Type B1 — Single split clamp hub with H7 bore and keyway.

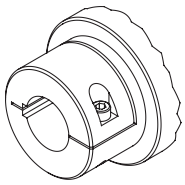

Reduction of angular backlash, during reversing drives, and high torques.

Type B2 — Single split clamp hub with splined bore.

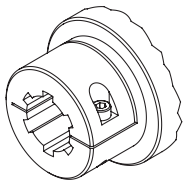

Reduction of angular backlash in the case of hard transmission.

Type C — Two piece clamp hub with plain H7 bore.

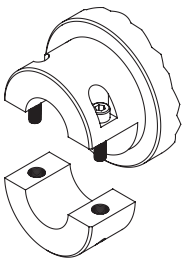

Reduction of angular backlash, and simple radial assembly/disassembly.

Type C1 — Two piece clamp hub with H7 bore and keyway.

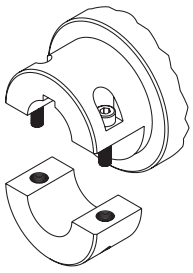

Simply assembly and reduction angular backlash, even on high torque.

Type G — Clamp connection with internal Taper Bush.

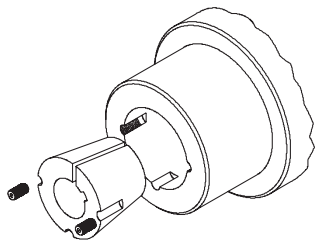

Flexibility of fitting for conical bushing without angular backlash.

Type D — Clamp connection with integrated locking assembly.

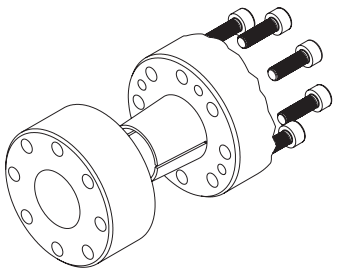

suitable for high speeds without change to standard dimensions **(.../CCE version)**.

Type E — Clamp connection with internal locking assembly.

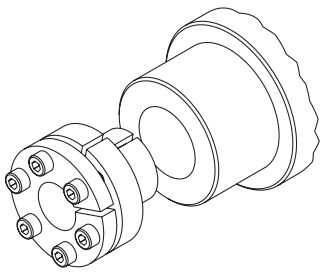

Reduction of angular backlash and reduced radial dimensions.

Type F — Clamp connection with external locking assembly.

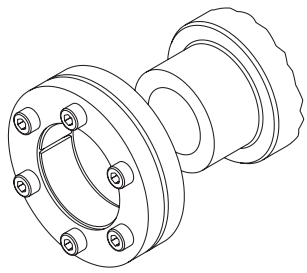

Fast and economic solution to transmit low torque.

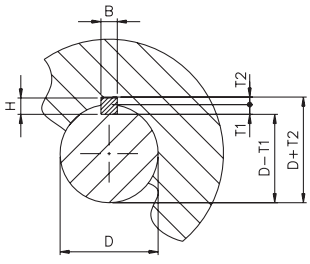

Bore and Keyways according to UNI 6604 (DIN 6885-1)

D	>10 12	>12 17	<17 22	>22 30	>30 38	>38 44	>44 50	>50 58	>58 65	>65 75	>75 85	>85 95	>95 110	>110 130	>130 150	>150 170	>170 200
B H9	4	5	6	8	10	12	14	16	18	20	22	25	28	32	36	40	45
H	4	5	6	7	8	8	9	10	11	12	14	14	16	18	20	22	25
T1	2,5	3	3,5	4	5	5	5,5	6	7	7,5	9	9	10	11	12	13	15
T2	1,8	2,3	2,8	3,3	3,3	3,3	3,8	4,3	4,4	4,9	5,4	5,4	6,4	7,4	8,4	9,4	10,4
	+0,1 0			+0,2 0											+0,3 0		

ComInTec®

FLEXIBLE COUPLINGS - RIGID COUPLINGS (BACKLASH FREE): hub connections and materials

HUB CONNECTIONS	GTR page 7	.../DBSE page 12	GRI page 17	GSF page 21	GAS/SG-ST page 25	GAS-ST page 30	GAS/SG-AL page 33	GAS-AL page 33	.../DBSE page 34	GEC page 39	GD page 43	GF page 47	GC page 49
Pilot bore	●	×	×	○	●	●	●	●	×	●	●	●	●
Type A	▲	▲	▲	×	▲	▲	▲	▲	▲	▲	▲	▲	▲
Type A1	●	●	▲	×	●	●	●	●	○	●	●	●	●
Type A2	▲	▲	×	×	▲	▲	×	×	×	▲	▲	▲	▲
Type B	○	▲	●	●	○	○	○	○	○	▲	▲	▲	▲
Type B1	▲	▲	▲	▲	▲	▲	▲	▲	▲	▲	▲	▲	▲
Type B2	▲	▲	▲	×	▲	▲	×	×	×	▲	▲	▲	▲
Type C	▲	▲	○	×	▲	▲	●	●	●	▲	▲	▲	▲
Type C1	▲	▲	▲	×	▲	▲	▲	▲	▲	▲	▲	▲	▲
Type G	▲	▲	×	×	▲	▲	×	×	×	▲	▲	▲	▲
Type D	▲	▲	×	×	●	×	▲	▲	▲	×	×	×	×
Type E	▲	▲	×	×	▲	▲	×	×	×	▲	▲	▲	▲
Type F	▲	▲	×	×	▲	▲	×	×	×	▲	×	▲	▲
MATERIAL													
Steel - ST	●	●	●	×	●	●			▲	●	●	●	●
Aluminium - AL	×	×	×	●				●	●	×	×	×	×
Stainless steel - SS	▲	×	▲	×	▲	▲			×	▲	×	▲	▲

Symbol	Description	Notes
●	Standard supply	• All types of hub connections are carried out only on the finished bore. • For the supply or feasibility of other types of hub locking and combinations please contact our technical department.
○	Optional standard supply	
▲	Supplied on request	
×	Not supplied	

GUIDE TO CHOOSING

For correct dimensioning of the chosen coupling, it is necessary to determine the correct torque to be transmitted, taking into consideration the type of application and determining the service factor "f". In the table below, this value is indicated referring to some common applications according to normative Agma 514.02.
The generic formula for calculating the value of the rated torque must ensure that the coupling is as follows:

$$C_{nom} \geq \frac{9550 \cdot f \cdot P}{n}$$

Where:
C_{nom} = coupling's nominal torque [Nm]
f = service factor
n = speed *[Rpm]*
P = power applied *[Kw]*

Sector	Type of machines	Service factor			
		Combustion engines		Electric motors Gas / Vapor turbine	Water turbine
		1÷3 Cylinders	4÷12 Cylinders		
Machines for food industries	Bottlers, Mixer, Crushers	3,8	3,0	2,0	2,5
	Centrifuges	3,0	2,5	1,5	2
	Furnaces, mulini a pale, Driers	5,5	4,5	3,0	3,5
Machines for chemical industries	agitators for viscous liquids, mixers, Heavy centrifuges, cooling drums, Rotating filters	3,8	3,0	2,0	2,5
	Agitators for liquids, Light centrifuges	3	2,5	1,5	2,0
	Drum washers	5,5	4,5	3,0	3,5
Machines for building industries	Elevators, earth-moving machines	5,5	4,5	2,0	2,5
Machines for extraction industries	Pump of process	3,8	3,0	2,0	2,5
	Drilling installations	5,5	4,5	3,0	3,5
Machines for rubber processing industries	Bending machines	3,8	3,0	2,0	2,5
	Extruders, Mixers, Crushers	5,5	4,5	3,0	3,5
Machines for metalworking industries	Driving gears	3,5	3,0	1,5	2,0
	Machine tools, Shears, Bending machines	3,8	3,0	2,0	2,5
	Presses, punches, straighteners	5,5	4,5	3,0	3,5
Machines for textile industries	Printing apparatus, Lap machines, Pickers, Frames	3,5	3,0	2,0	2,5
Packaging machines	Conveyors, Welders	3,8	3,0	2,0	2,5
	Case packers, Burnishing machines, Forming, Palletizers	5,5	4,5	3,0	3,5
Fans	Centrifuges	3,8	3,0	2,0	2,5
	large blade	5,5	4,5	3,0	3,5
Conveyors	Chain, Screw, Plate conveyors, Elevators	3,8	3,0	2,0	2,5
	Inclined elevators, Extraction systems, Belt conveyors	5,5	4,5	3,0	3,5
Machines for paper industries	Bending machines	3,8	3,0	2,0	2,5
	Paper pressers, Paper rolls, Cylinder dryers	5,5	4,5	3,0	3,5
Machines for mining industries	Rail vehicles, Sump pumps, Winches to maneuver	3,8	3,0	2,0	2,5
	Tracked vehicles, Wheeled loaders, Excavators cup	5,5	4,5	3,0	3,5
Compressors	Axial, Centrifugal, Radial	3,0	2,5	1,5	2,0
	Multistage centrifugal blowers	3,8	3,0	2,0	2,5
	Alternates	5,5	4,5	3,0	3,5
Machines for plastic processing industries	Calenders, Crushers, Mixers	3,8	3,0	2,0	2,5
Machines for woodworking processing industries	Generic woodworking	3,0	2,5	1,5	2,0
	Planning machines	3,8	3,0	2,0	2,5
	Bark-peelers, Saws	5,5	4,5	3,0	3,5
Machines for laminating industries	Light roller ways, Cooling beds	3,8	3,0	2,0	2,5
	Cold rolling mills, pipe welders, ingot conveyors cutting-off machines, Sheet cutting	5,5	4,5	3,0	3,5
Pumps	Centrifuges	3,0	2,5	1,5	2,0
	Centrifuges for viscous liquids	3,8	3,0	2,0	2,5
	Alternatives, Pressure pumps	5,5	4,5	3,0	3,5
Cranes	Slewing cranes, Lifting cranes	3,8	3,0	2,0	2,5
	Cranes traverse	3,0	2,5	1,5	2,0

TORSIONALLY RIGID COUPLING

Up to 130.000 Nm of torque and 205 mm bore

GTR

ComInTec®
Technology for Safety

GTR - torsionally rigid coupling: introduction

- Made in steel fully turned with standard treatment of phosphating.
- Disc pack in stainless steel.
- High torsional rigidity.
- Maintenance and wear free.
- Version with double disc pack: GTR/D.
- High torque possible.

ON REQUEST

- Use in applications with high operation temperatures (> 150 °C) possible.
- Specific treatments or version in full stainless steel possible.
- Reinforced couplings for specific requirements and heavy applications.
- Connection to torque limiter (safety coupling) range possible.

Designed to suit applications where high reliability, precision and an optimum weight/power ratio is required; ideally suited for applications with high speeds and power, also offering low overhung loads when using the spacer version.
This coupling is composed of three main items: the two fully turned hubs, made in steel UNI EN10083/98 and the disc pack, in stainless steel AISI 304 C with connection screws in steel class 10.9. In the “double” version, GTR/D, there is also a spacer made to length, also built in steel UNI EN10083/98, fixed between the hubs and the two disc packs.
All the components of GTR couplings, except the spacer (GTR/D and GTR/DBSE) are made and statically balanced in class DIN ISO 1940-1:2003 Q 6.3, before the machining of the keyway.
In accordance to the specific need of the application, it is possible to make static or dynamic balancing on each separate component or on the coupling, fully assembled to customer requirements.

DESCRIPTION OF DISCS

The fundamental elements of this torsionally rigid coupling are the disc packs, built from a series of stainless steel discs type AISI 304-C, connected by steel bushes. This disc pack is connected in an alternate way to the hub flange or the eventual spacer, by using screws in steel class 10.9 and the relevant self-locking nuts.
With reference to the configuration, the disc packs can be:

A) Continuous ring disc pack for 6 screws (coupling sizes 1-7)
B) Sectional disc pack for 6 screws (coupling sizes 8-11)
C) Sectional disc pack for 8 screws (coupling sizes 12-15)

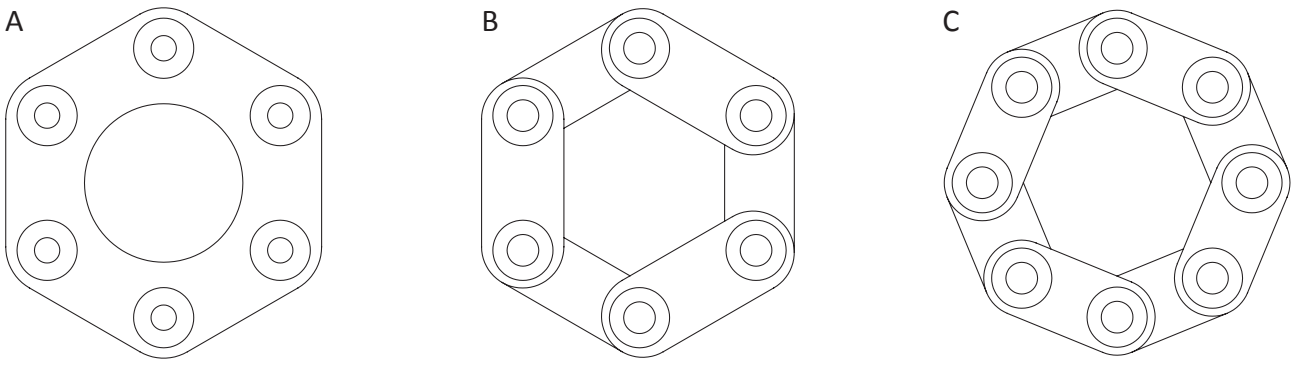

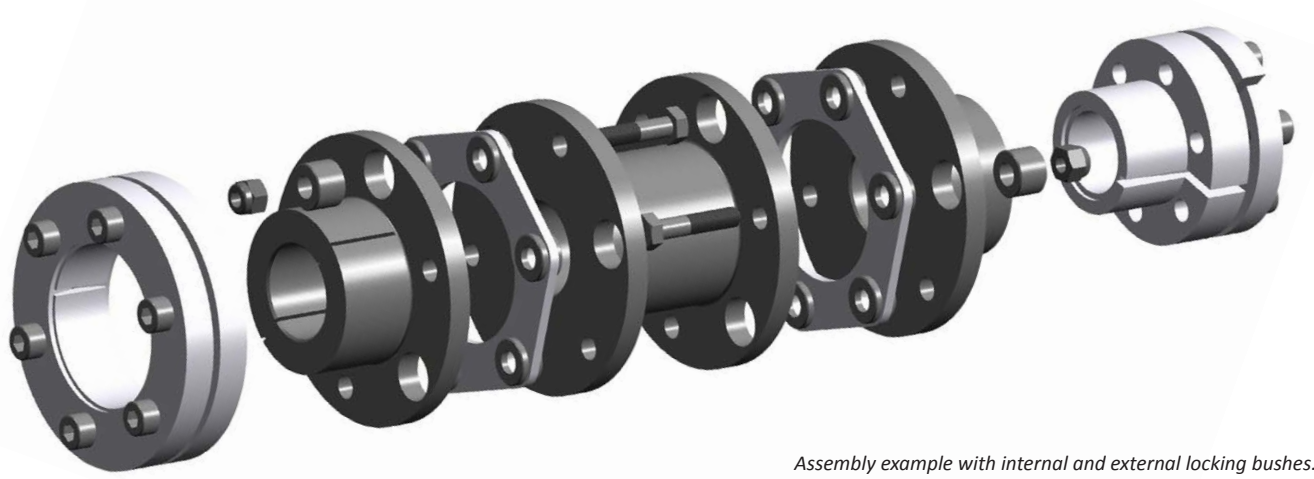

Assembly example with internal and external locking bushes.

GTR - torsionally rigid coupling: introduction

Version with personalized spacer for a specific D.B.S.E. (page 12).

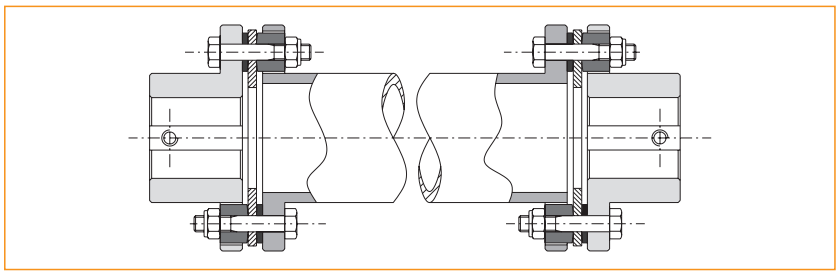

Manufacturing with internal hubs in order to reduce the axial dimensions.

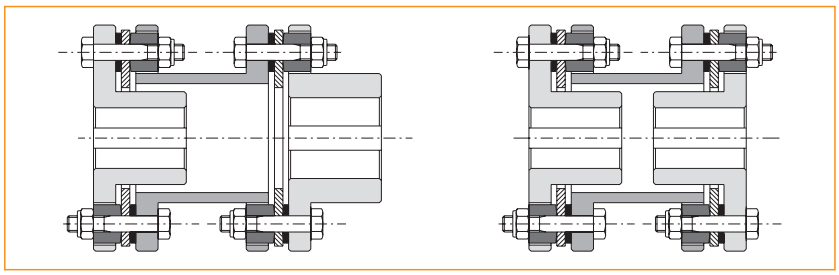

Manufacturing in addition to the /SG torque limiters range, with simple and/or double disc pack.

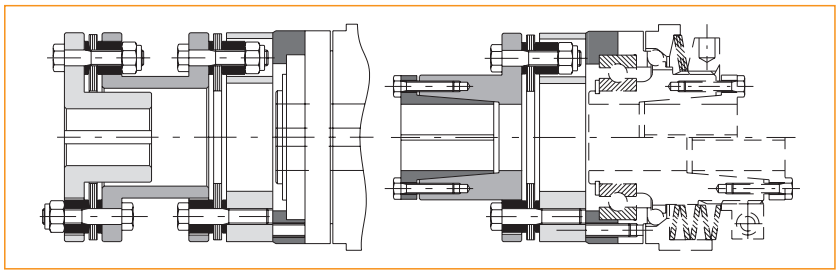

Solution with adaptors both in simple and double version, for easy substitution of disc packs without moving the hubs (in accordance with directive API610).

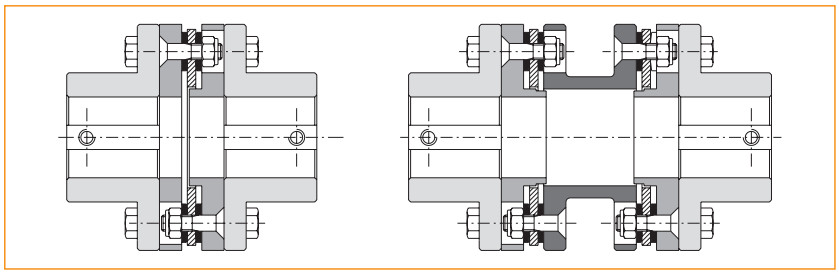

Solution for vertical mounting, where the spacer (GTR/D or gtr/dbse) has to be supported to avoid the weight by pre-loading the disc pack.

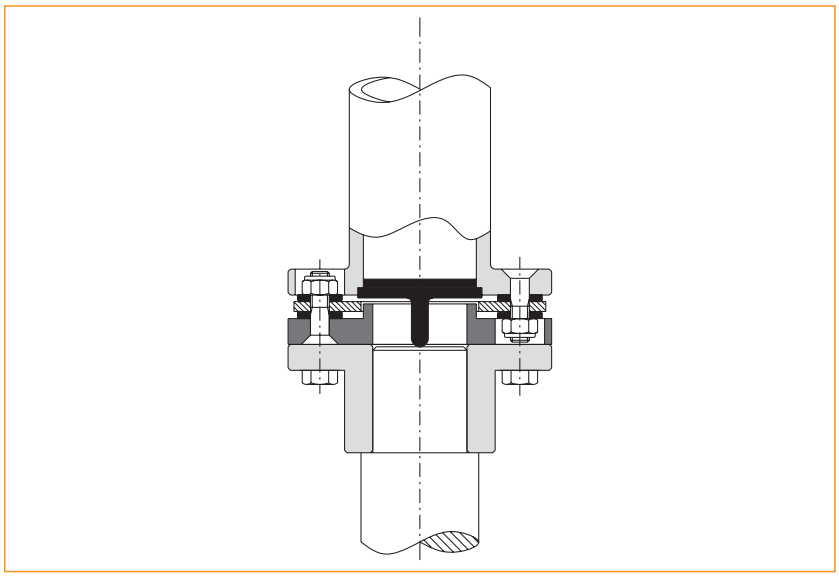

GTR - torsionally rigid coupling: technical data

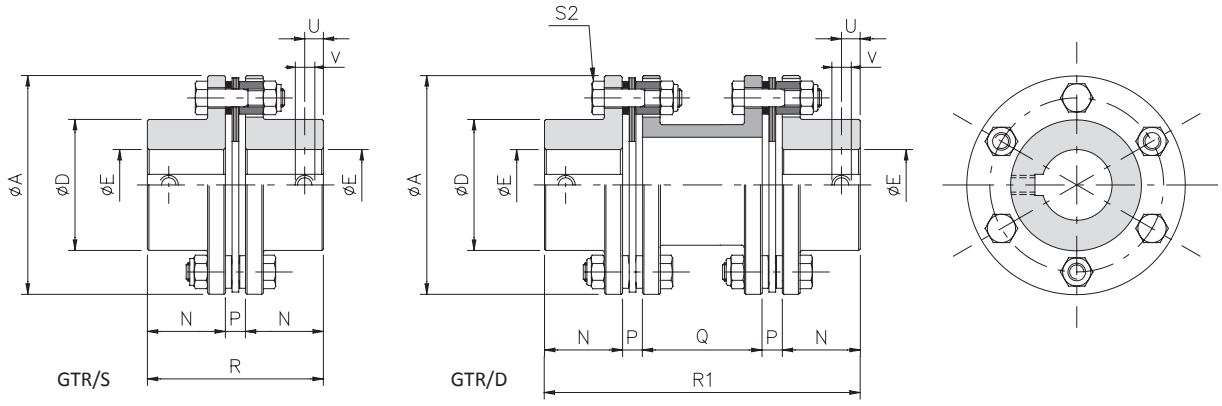

DIMENSIONS

Size	A	D	E H7 max	E4 H7 max	N	P	Q std *1	R	R1	U	V
0	78	45	32	25	29	7,5	50	65,5	123	10	M5
1	80	45	32	25	36	8	50	80	138	10	M5
2	92	53	38	30	42	8	50	92	150	10	M5
3	112	64	45	35	46	10	59	102	171	15	M8
4	136	76	52	45	56	12	75	124	211	15	M8
5	162	92	65	55	66	13	95	145	253	20	M8
6	182	112	80	70	80	14	102	174	290	20	M8
7	206	128	90	80	92	15	101	199	315	20	M10
8	226	133	95	80	100	22	136	222	380	20	M10
9	252	155	110	-	110	25	130	245	400	25	M12
10	296	170	120	-	120	32	144	272	448	25	M12
▲ **11**	318	195	138	-	140	32	136	312	480	30	M16
▲ **12**	352	218	155	-	155	34	172	344	550	40	M20
▲ **13**	386	252	175	-	175	37	226	387	650	40	M20
▲ **14**	426	272	190	-	190	37	236	417	690	45	M24
▲ **15**	456	292	205	-	205	42	246	452	740	45	M24

▲ On request

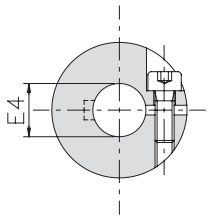

TORQUE PERMISSIBLE WITH CLAMP LOCKING TYPE B (GTR/S; GTR/D; GTR/DBSE)

Torque transmitted *[Nm]* relevant to the ø finished bore *[mm]*																												
Size	10	11	12	14	15	16	18	19	20	22	24	25	28	30	32	35	38	40	42	45	48	50	55	60	65	70	75	80
0	46	47	48	50	52	53	55	56	58	60	63	64																
1	46	47	48	50	52	53	55	56	58	60	63	64																
2			73	76	77	78	81	83	84	87	89	91	95	97														
3						160	165	167	170	175	179	182	189	194	199	207													
4									194	199	204	207	214	219	224	232	239	244	249	257								
5											317	320	330	337	343	353	363	370	376	386	396	403	419					
6														588	598	612	627	637	646	661	675	685	709	733	757	781		
7																		675	685	699	714	723	748	772	796	820	844	868
8																				1327	1353	1371	1416	1460	1505	1549	1594	1638

GTR - torsionally rigid coupling: technical data

TECHNICAL CHARACTERISTICS GTR/S

Size	Torque [Nm]			Weight	Inertia	Max speed *2	Axial load	Tightening torque screws [Nm]		Misalignment			Rigidity R_Ts
	Nom	Max	Alternating motion	[Kg]	[Kgm²]	[Rpm]	[Kg]	S1	S2	Angular α [°]	Axial x [mm]	Radial k [mm]	[10³ Nm/rad]
0	60	120	20	1,6	0,00058	14500	10	10,5	12	1°	0,7	-	80
1	100	200	33	1,3	0,00067	14200	14	10,5	12	0° 45’	0,8	-	117
2	150	300	50	2,4	0,00193	12500	19	17	13	0° 45’	0,9	-	156
3	300	600	100	3,9	0,00386	10200	26	43	22	0° 45’	1,2	-	415
4	700	1400	233	6,3	0,00869	8500	34	84	39	0° 45’	1,4	-	970
5	1100	2200	366	10,4	0,01009	7000	53	145	85	0° 45’	1,6	-	1846
6	1700	3400	566	15,6	0,03648	6300	70	145	95	0° 45’	2,0	-	2242
7	2600	5200	866	24,8	0,07735	5500	79	360	127	0° 45’	2,2	-	3511
8	4000	8000	1333	33,0	0,13403	5000	104	-	260	0° 45’	2,4	-	8991
9	7000	14000	2333	42,0	0,25445	4500	115	-	480	0° 45’	2,5	-	11941
10	10000	20000	3333	67,0	0,45019	3800	138	-	760	0° 45’	2,6	-	15720
▲ **11**	12000	24000	4000	94,0	0,71654	3600	279	-	780	0° 45’	2,9	-	15521
▲ **12**	25000	50000	8333	130,0	1,22340	3200	484	-	800	0° 30’	2,9	-	37700
▲ **13**	35000	70000	11666	160,0	1,94410	3000	638	-	1100	0° 30’	3,1	-	51500
▲ **14**	50000	100000	16666	210,0	3,10950	2700	683	-	1500	0° 30’	3,4	-	64300
▲ **15**	65000	130000	21666	270,0	4,37920	2500	744	-	2600	0° 30’	3,8	-	69800

TECHNICAL CHARACTERISTICS GTR/D

Size	Torque [Nm]			Weight	Inertia	Max speed *2	Axial load	Tightening torque screws [Nm]		Misalignment			Rigidity R_Td
	Nom	Max	Alternating motion	[Kg]	[Kgm²]	[Rpm]	[Kg]	S1	S2	Angular α [°]	Axial x [mm]	Radial K [mm]	[10³ Nm/rad]
0	60	120	20	1,7	0,00083	14500	10	10,5	12	1° 30’	1,4	0,70	42
1	100	200	33	1,8	0,00092	14200	14	10,5	12	1° 30’	1,6	0,80	51
2	150	300	50	3,5	0,00286	12500	19	17	13	1° 30’	1,8	0,80	71
3	300	600	100	5,8	0,00740	10200	26	43	22	1° 30’	2,4	0,95	184
4	700	1400	233	9,4	0,01660	8500	34	84	39	1° 30’	2,8	1,20	422
5	1100	2200	366	15,2	0,02850	7000	53	145	85	1° 30’	3,2	1,45	803
6	1700	3400	566	23,0	0,06358	6300	70	145	95	1° 30’	4,0	1,55	1019
7	2600	5200	866	34,0	0,12816	5500	79	360	127	1° 30’	4,4	1,55	1596
8	4000	8000	1333	47,0	0,22927	5000	104	-	260	1° 30’	4,8	2,15	3996
9	7000	14000	2333	61,0	0,44598	4500	115	-	480	1° 30’	5,0	2,15	5192
10	10000	20000	3333	96,0	0,79995	3800	138	-	760	1° 30’	5,2	2,40	6690
▲ **11**	12000	24000	4000	132,0	1,22823	3600	279	-	780	1° 30’	5,8	2,40	6748
▲ **12**	25000	50000	8333	173,0	1,97120	3200	484	-	800	1°	5,8	1,30	15900
▲ **13**	35000	70000	11666	208,0	3,06240	3000	638	-	1100	1°	6,2	1,70	21800
▲ **14**	50000	100000	16666	280,0	4,89420	2700	683	-	1500	1°	6,8	1,80	27000
▲ **15**	65000	130000	21666	350,0	6,93250	2500	744	-	2600	1°	7,7	1,90	32000

▲ On request

NOTES

- Qstd (*1) - Different dimensions available on request.
- Max speed (*2) - For higher speeds please contact our technical department.
- Weights refer to to the coupling with pilot bore.
- Inertias refer to the coupling with maximum bore.
- **Choice and availability of different hub connection type see pages 4 and 5.**

GTR/DBSE - torsionally rigid coupling with spacer: introduction

- Made in steel and fully turned.
- Galvanizing corrosion proofing.
- Disk pack in stainless steel.
- Maintenance and wear free.
- Personalized spacer version for a specific D.B.SE.
- Welded spacer for high torsional rigidity.

ON REQUEST

- Use in applications with high operation temperatures (> 150 °C) possible.
- Dynamic balancing up to Q=2,5 possible.
- Customized versions for specific needs.
- Different hub connection type possible (pages 4 and 5).

This backlash free coupling with spacer , called the GTR/DBSE (Distance Between Shaft Ends), consists off a central spacer that is made to order depending on the application and two flexible disc packs and hubs allowing for the connection of two driver shafts located apart.
This type of disc coupling is made of special steel with the disc packs manufactured in AISI 304 stainless steel, in order to obtain a wear and maintenance free flexible coupling. To promote a long life even in adverse conditions the coupling is supplied with an anti-corrosive surface treatment. All the parts of the coupling (with exception of the DBSE spacer version) are statically balanced in class DIN-ISO 1940:1:2003 Q 6.3 before machining of the key and its locking screw.
In accordance with the specific requirements of the application, you can perform a static or dynamic balancing different on each separate component or the coupling fully assembled.

DESCRIPTION OF DISCS

The fundamental elements of this torsionally rigid coupling are the disc packs, built from a series of stainless steel discs type AISI 304-C, connected by steel bushes. This disc pack is connected in an alternate way to the hub flange or the eventual spacer, by using screws in steel class 10.9 and the relevant self-locking nuts.
With reference to the configuration, the disc packs can be:

A) Continuous ring disc pack for 6 screws (coupling sizes 1-7)
B) Sectional disc pack for 6 screws (coupling sizes 8-11)
C) Sectional disc pack for 8 screws (coupling sizes 12-15)

APPLICATION EXAMPLE

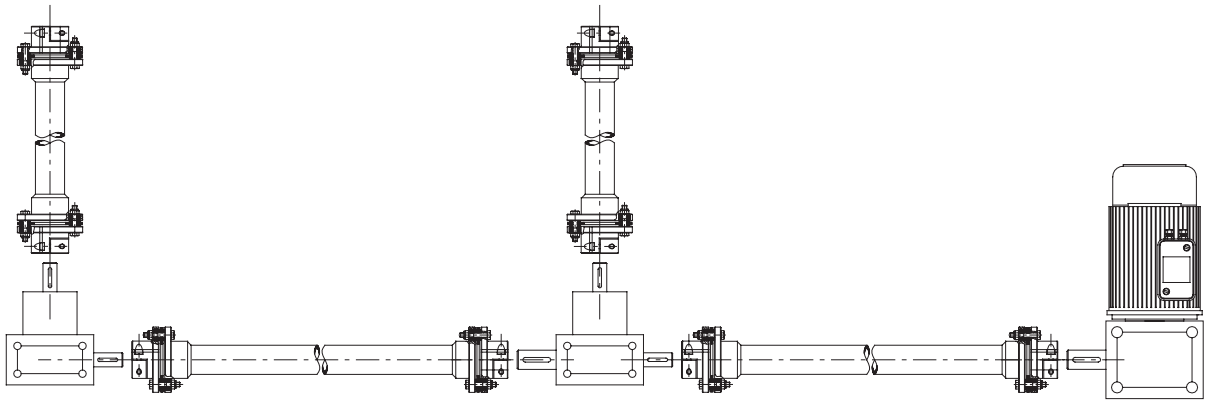

Connecting two driving units situated some distance apart.

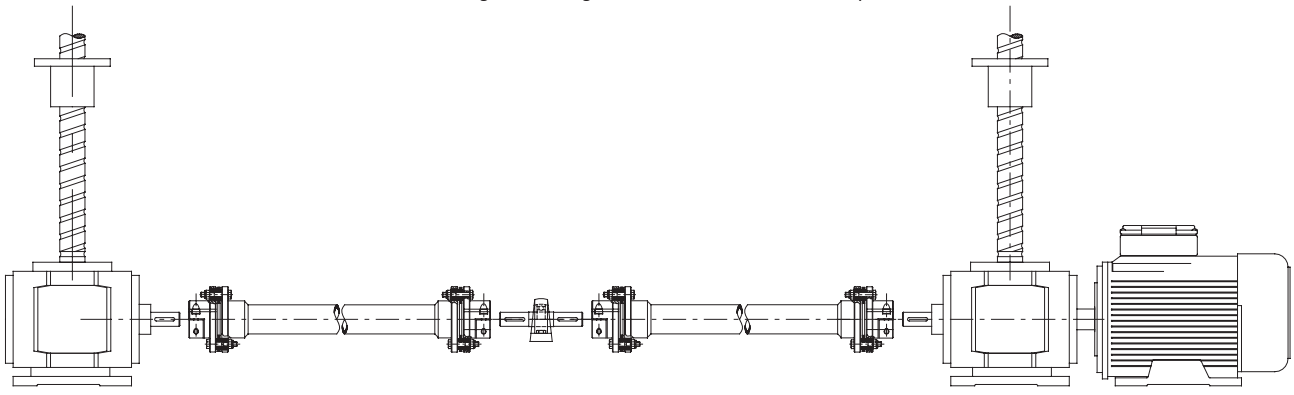

In the case of DBSE> 3 m with high speed, it is necessary to use an intermediate shaft with support and bearing

GTR/DBSE - torsionally rigid coupling with spacer: technical data

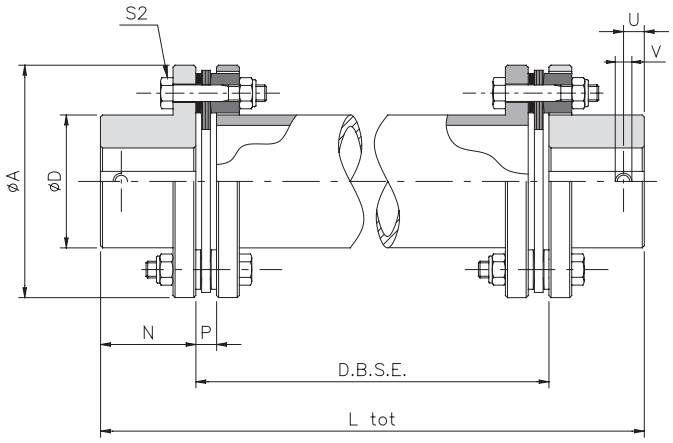

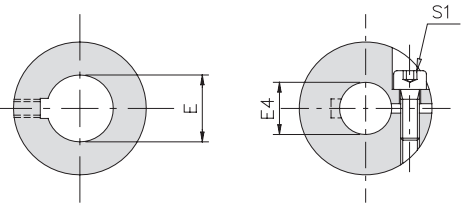

For spacer with elastomeric element (GAS/DBSE and GAS/SG/DBSE) see page 34.

DIMENSIONS

Size	A	D	E H7 max	E4 H7 max	N	P	U	V	L_{tot}
0	78	45	32	25	29	7,5	10	M5	L_{tot} = D.B.S.E. + 2 N
1	80	45	32	25	36	8	10	M5	
2	92	53	38	30	42	8	10	M5	
3	112	64	45	35	46	10	15	M8	
4	136	76	52	45	56	12	15	M8	
5	162	92	65	55	66	13	20	M8	
▲ **6**	182	112	80	70	80	14	20	M8	
▲ **7**	206	128	90	80	92	15	20	M10	
▲ **8**	226	133	95	80	100	22	20	M10	
▲ **9**	252	155	110	-	110	25	25	M12	
▲ **10**	296	170	120	-	120	32	25	M12	
▲ **11**	318	195	138	-	140	32	30	M16	
▲ **12**	352	218	155	-	155	34	40	M20	
▲ **13**	386	252	175	-	175	37	40	M20	
▲ **14**	426	272	190	-	190	37	45	M24	
▲ **15**	456	292	205	-	205	42	45	M24	

TECHNICAL CHARACTERISTICS

Size	Torque [Nm]			Spacer			Total Weight	Max speed *2	Axial load	Tightening torque screws [Nm]		Misalignment		
	Nom	Max	Alternating motion	Weight [Kg/m]	Inertia [Kgm²/m]	Relative rigidity $R_T$rel [10^6 Nm/rad•m]	[Kg/m]	[Rpm]	[Kg]	S1	S2	Angular α [°]	Axial x [mm]	Radial k [mm]
0	60	120	20	5,0	0,00197	12	Peso tot = peso [GTR/D] + peso allunga • (DBSE - 2P)	14500	10	10,5	12	1° 30'	1,40	K = (DBSE - P) • tg α
1	100	200	33	5,0	0,00197	12		14200	14	10,5	12	1° 30'	1,60	
2	150	300	50	5,5	0,00281	21		12500	19	17	13	1° 30'	1,90	
3	300	600	100	5,5	0,00281	29		10200	26	43	22	1° 30'	2,50	
4	700	1400	233	8,0	0,00582	60		8500	34	84	39	1° 30'	2,90	
5	1100	2200	366	13,5	0,01550	148		7000	53	145	85	1° 30'	3,30	
▲ **6**	1700	3400	566	16,0	0,02718	269		6300	70	145	95	1° 30'	4,00	
▲ **7**	2600	5200	866	16,5	0,03096	321		5500	79	360	127	1° 30'	4,50	
▲ **8**	4000	8000	1333	21,5	0,04907	640		5000	104	-	260	1° 30'	4,90	
▲ **9**	7000	14000	2333	30,0	0,10648	1100		4500	115	-	480	1° 30'	5,10	
▲ **10**	10000	20000	3333	38,0	0,15508	1610		3800	138	-	760	1° 30'	5,30	
▲ **11**	12000	24000	4000	44,0	0,23972	-		3600	279	-	780	1° 30'	5,90	
▲ **12**	25000	50000	8333	62,0	0,41522	-		3200	484	-	800	1°	5,90	
▲ **13**	35000	70000	11666	67,0	0,53907	-		3000	638	-	1100	1°	6,30	
▲ **14**	50000	100000	16666	-	-	-		2700	683	-	1500	1°	6,80	
▲ **15**	65000	130000	21666	-	-	-		2500	744	-	2600	1°	7,70	

▲ On request

NOTES

- Max speeds (*2) - For higher speeds please contact our technical department.
- **Choice and availability of different hub connection type see pages 4 and 5.**

ComInTec®

GTR/DBSE - torsionally rigid coupling with spacer: additional information

The model with spacer "GTR/DBSE", in addition to being essential for connecting elements of transmissions situated apart , it is able (unlike the classic model GTR/S) to recover, as needed, up to twice the angular misalignment (figure 2) and axial (figure 3) or a high radial misalignment (figure 1) according to the formula:

$$K = [\ L_{tot} - (2 \cdot N) - P\ ] \cdot Tg\ \alpha$$

Where:
- K = Radial misalignment *[mm]*
- L_{tot} = Total length GTR/DBSE coupling *[mm]*
- N = Useful length of an half-hub *[mm]*
- P = Useful part of elastic element *[mm]*
- α = Angular misalignment GTR/S *[°]*

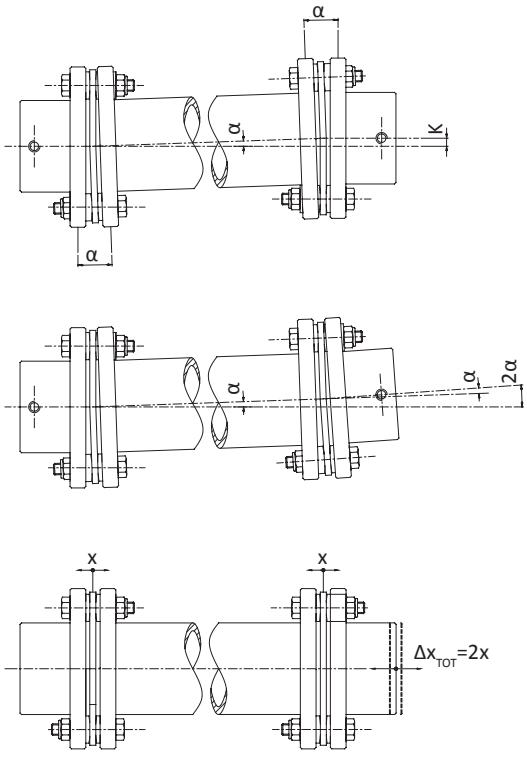

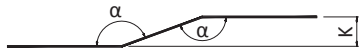

1. Radial misalignment

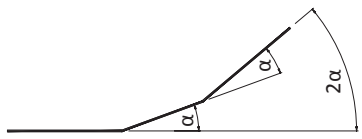

2. Angular misalignment

3. Axial misalignment

It is also possible to determine the positioning error through the torsion angle according to the formula:

$$\beta = \frac{180 \cdot C_{mot}}{\pi \cdot R_{TOT}}$$

Where:
- β = Torsion angle *[°]*
- C_{mot} = Max torque motor side *[Nm]*
- R_{TOT} = Total torsional rigidity of coupling *[Nm/rad]*

The total torsional rigidity of the GTR/DBSE coupling is expressed by the formula:

$$R_{TOT} = \frac{1}{\left(\frac{2}{R_T s} + \frac{L_t}{R_T rel}\right)}$$

Dove:
- R_{TOT} = Total torsional rigidity of coupling GTR/DBSE *[Nm/rad]*
- $R_T s$ = Torsional rigidity of coupling GTR/S *[Nm/rad]*
- $R_T rel$ = Relative rigidity of spacer *[Nm/rad]*
- L_t = Spacer length (=DBSE-2P) *[m]*

The maximum speed of the coupling is influenced by several factors:

- Peripheral speed of the coupling;
- Weight of the coupling;
- Length of the spacer;
- Rigidity of the coupling;
- Quality of balance.

In general, for most applications that require the GTR/DBSE model, dynamic balancing is NOT required. In other cases there need to evaluate in reference to the graphic 4 in function of the speed and the length of the extension custom.

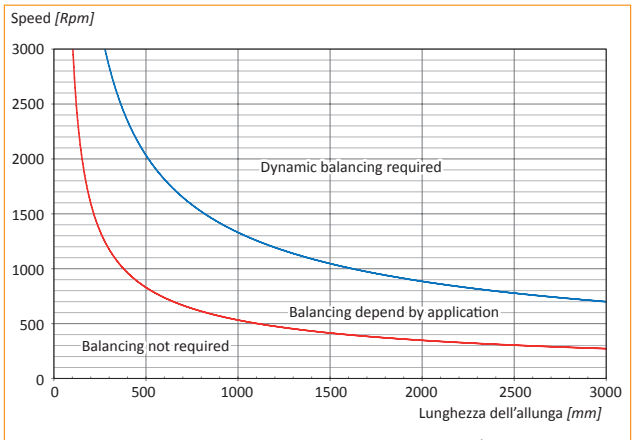

4. Balancing ratio in function of DBSE (GTR/DBSE)

GTR & GTR/DBSE - torsionally rigid coupling: additional information

DIMENSIONING

For pre-selection of the coupling's size you can use the generic formula indicated on page 6.
The GTR coupling will accomodate momentary peak torque "C.C." of 2,5 times than nominal torque.
If the C.C. is higher than 2,5 times than the nominal torque, it is necessary to choose the coupling using the following formula:

$$C'_{nom} = \frac{C.C.}{2,5}$$

$$C_{nom} \geq C'_{nom}$$

Where:
C'_{nom} = theoretic nominal torque of the coupling *[Nm]*
C_{nom} = effective nominal torque of the coupling *[Nm]*
C.C. = peak torque *[Nm]*

The nominal torque indicated on the catalogue for GTR coupling refers to the static torque 2 times lower than the nominal torque, with service factor f=1.5. On the contrary, if the static torque of the motor is two times higher than the nominal one, it is possible using the following formula:

$$C_{nom} = \frac{C_{spunto}}{1,5}$$

$$C_{nom} \geq C'_{nom}$$

Where:
C'_{nom} = theoretic nominal torque of the coupling *[Nm]*
C_{nom} = effective nominal torque of the coupling *[Nm]*
C_{spunto} = peak torque *[Nm]*

Having calculated the theoretical nominal torque (C'nom), so that the coupling can be sized correctly it is necessary, to compare the effective technical characteristics of GTR (pages 8-9) and to choose the size able to transmit an effective nominal torque (Cnom) higher or equal to the one found by the described formulae above.

Having established the size of the coupling to be used, it is possible to make other checks considering further parameters:

$$C_{nom} > \frac{9550 \cdot P}{n} \cdot f \cdot f_T \cdot f_D$$

$$C_{nom} > \frac{9550 \cdot P}{n} \cdot f_K \cdot f_T \cdot f_D$$

Dove:
C_{nom} = nominal torque of the coupling *[Nm]*
f = service factor (pag.5)
f_T = thermic factor (grafico 1)
f_D = direction factor
f_K = load factor
n = speed *[Rpm]*
P = applied power *[Kw]*

Direction factor (f_D)
1 = one-direction rotation
2 = alternate rotation

Load factor (K)
1,5 = continuous load
2 = discontinuous load
1,5÷2 = machine tool
2,5÷4 = shock load

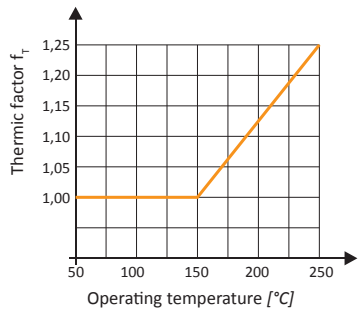

1. Thermic factor (f_T) in function of the operating temperature [°C]

Once the torque to be transmitted has been calculated and verified , it is necessary to consider flexibility offered by the chosen coupling with actual misalignments present between the shafts to be connected.
It is important to note that the axial and radial misalignments permitted are inversely proportional (where one increases the other must decrease). If all types of misalignment are present in the assembly it is important the total sum as a percentage to not exceed 100% as shown in graphic 2.

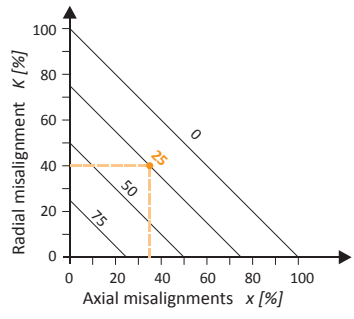

2. Allowed ratio between misalignments [%]

GTR & GTR/DBSE - torsionally rigid coupling: additional information

The rated outputs on the catalogue refer to normal use without shocks and with shafts well-aligned with the environmental temperature
The value of axial thrust (+- 20%) is relevant to the axial movement (graphic 7).

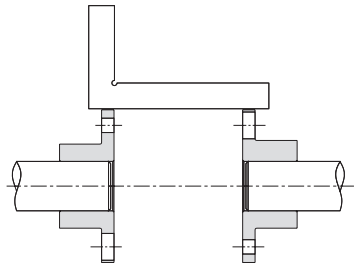

5.

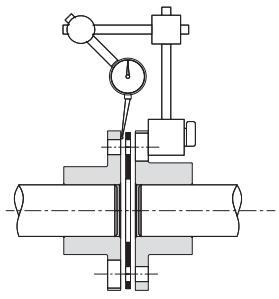

6.

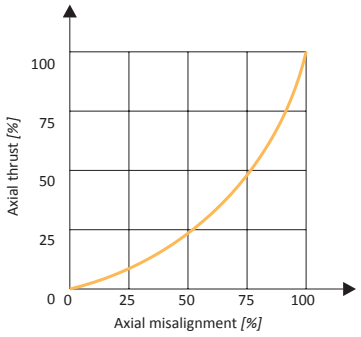

7. Relation between axial force [%] and axial misalignment [%]

The maximum speed of the coupling is influenced by several factors:

- Peripheral speed of the coupling;
- Weight of the coupling;
- Length of the spacer (pages 12-14);
- Rigidity of the coupling;
- Quality of balance.

In general, for most applications dynamic balancing is NOT required; in other cases there is need to evaluate in reference to the graphic 8.

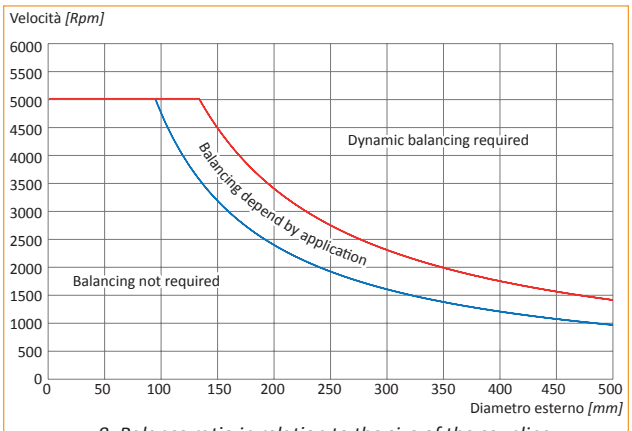

8. Balance ratio in relation to the size of the coupling (GTR/S – GTR/D)

FITTING

1) Achieve radial and axial alignment as precisely as possible to permit the maximum absorption of possible misalignments and life of the coupling (picture 5 and 6).
2) Make sure that the shafts are assembled so that its extremity is square with the surface of the half-coupling (the length of the spacer including two disc packs should be equal to the distance between the two shafts) (picture 9).
3) Tightening the screws with a torque wrench in a cross sequence, continuously until you obtain the tightening torque indicated in the catalogue. It is recommended that only the nut/bolt not in contact with the disk pack is rotated to prevent twisting of the laminations.
4) Finally it is necessary to check and ensure the disc packs are perfectly perpendicular to the shaft axis. It may be necessary to release and tighten some screws again.

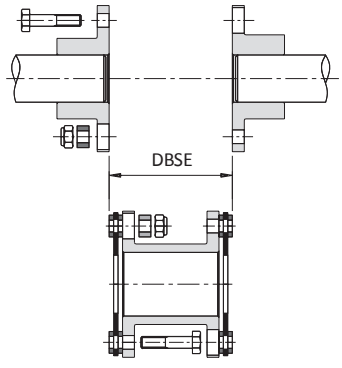

9.

In the coupling with spacer (GTR/D and GTR/DBSE), the central part of the couplings (spacing bar) can be considered as a weight suspended between two springs (lamellar pack). It will have a natural frequency which, if excited, can produce some oscillations of the spacer causing damage to packs. It is recommended to increase the distance between the flanges of the hubs compared to the nominal dimentions “DBSE” (picture 9) by 1,5-2 mm to decrease the natural axial frequency.
In this way the lamellar packs are kept under tension and the possibility of spacer oscillation reduces.
Note: about installation in vertical position please see execution proposal at page 9.

ORDER EXAMPLE

TORSIONALLY RIGID COUPLING						
Model	Size	Bore 1	Locking type bore 1	Bore 2	Locking type bore 2	● DBSE / L_{tot}
GTR	**GR.2**	**bore Ø25 H7**	**A1**	**bore Ø38 H7**	**A1**	**-**

Model	
GTR/S	Simple torsionally rigid coupling
GTR/D	Double torsionally rigid coupling
● GTR/DBSE	Torsionally rigid coupling with spacer

Size
from 0 to 15

Locking type
See hub connection type list at page 4

● In case of DBSE model indicate the length or spacer "DBSE" or total coupling length "L_{tot}".
Example DBSE = 180mm / L_{tot} = 264mm

RIGID COUPLING

Up to 860 Nm of torque and 50 mm bore

GRI

ComInTec®
Technology for Safety

GRI - rigid coupling: introduction

- Made in steel fully turned with phosphating treatment.
- Extremely rigid connection.
- High torque possible.
- Wear and maintenance free.
- Compact dimensions.
- Finished bore with ISO H8 tolerance and low roughness.

ON REQUEST

- Different customized bore.
- Single split clamp hub with keyway (type B1).
- Two piece clamp hub with keyway (type C1) or without keyway (type C).
- Anti-corrosive surface treatments for specific needs possible.

GRI rigid couplings have been designed and manufactured to connect two shafts of the same diameter but without allowing any relevant misalignment.
The coupling is manufactured in one element for the single split version. A two piece unit is available on request allowing simple and fast mounting and dismounting.

DIMENSIONING

The nominal torque of the coupling must be higher than the maximum torque of the motor's side, according to the generic formula on page 6.
The indicated torque values have been calculated based on a friction coefficient for shaft-coupling of 0.15 µm.

FITTING

It is advised to machine the connecting shafts with:

- Surface finish with Ra=1.6 µm.
- Nominal tolerance h6.
- Perfectly aligned shafts.

Tighten the locking screws in steel class 8.8 with a torque wrench, in accordance to the tightening torque indicated in the catalogue.

APPLICATION EXAMPLE

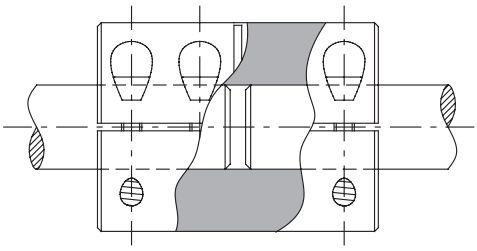

Locking type B

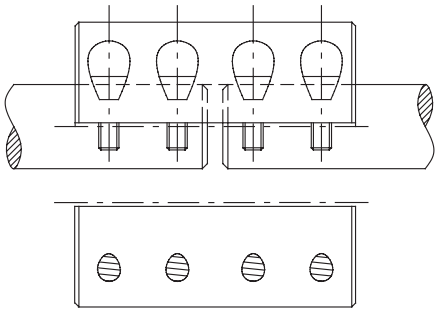

Locking type C

GRI - rigid coupling: technical data

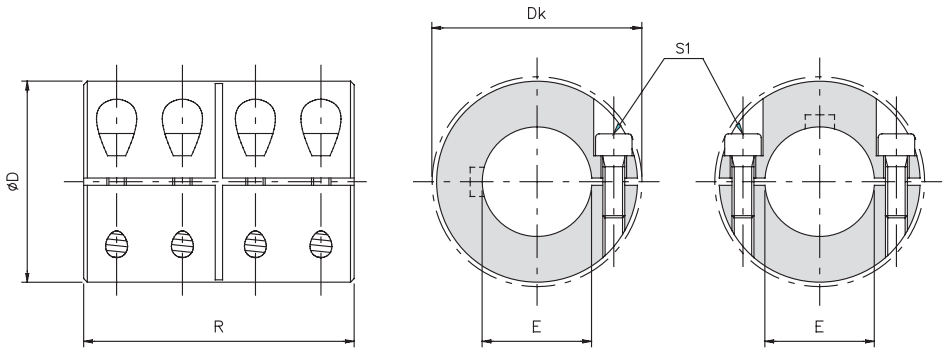

DIMENSIONS

Size	D	Dk	E H8	R
10	32	33	10	45
15	40	-	15	50
20	45	47	20	65
25	50	52	25	70
30	55	57	30	75
35	65	70	35	85
40	70	74	40	90
45	80	83	45	100
50	90	95	50	110

TECHNICAL CHARACTERISTICS

Size	Max torque *[Nm]*		Weight *[Kg]*	Inertia *[Kgm²]*	Max speed *[Rpm]*	Screws S1		
	Locking type B	▲ Locking type C				Locking type B	Locking type C	Tightening torque *[Nm]*
10	44	38	0,25	0,000028	5500	n°4 x M4	n°8 x M4	5,2
15	99	94	0,42	0,000080	4200	n°4 x M5	n°8 x M5	10,5
20	141	141	0,65	0,000172	3800	n°4 x M6	n°8 x M6	17,0
25	171	177	0,87	0,000305	3500	n°4 x M6	n°8 x M6	17,0
30	195	212	1,11	0,000503	3200	n°4 x M6	n°8 x M6	17,0
35	353	380	1,75	0,001098	2700	n°4 x M8	n°8 x M8	43,0
40	386	434	2,13	0,001615	2500	n°4 x M8	n°8 x M8	43,0
45	436	488	2,96	0,002896	2200	n°4 x M8	n°8 x M8	43,0
50	790	860	4,31	0,005284	1900	n°4 x M10	n°8 x M10	84,0

ORDER EXAMPLE

RIGID COUPLING				
Model	Size	● Bore 1	● Bore 2	Locking type bore 1 & 2
GRI	**GR.20**	**bore Ø20 H7**	**bore Ø20 H7**	**B**

Size
From 10 to 50

Locking type
See hub connection type list at page 4

Model
GRI | Rigid coupling

● Model available with finished bore only.

▲ On request

NOTES

- **Choice and availability of different hub connection types see pages 4 and 5.**

BELLOW COUPLING

Up to 300 Nm of torque and 45 mm bore

GSF

ComInTec®
Technology for Safety

GSF - bellow coupling: introduction

- Hubs made in aluminum fully turned and bellow in stainless steel.
- Suitable for applications with high temperatures (> 300 °C).
- High torsional rigidity and low inertia.
- Wear and maintenance free.
- Backlash free for precision and high speeds.
- Single split clamp hub (type B) and finished bore in ISO H8 tollerance and low roughness.

ON REQUEST

- Single split clamp hub with H7 bore and keyway (type B1).
- Two piece clamp hub with H7 bore and keyway (type C1) or without keyway (type C).
- Customized manufacturing for specific requirements.
- Connection to the Torque limiter's (safety coupling) range possible.

The GSF bellow couplings have been designed and manufactured for all applications requiring excellent dynamic characteristics, necessary for high speeds, fast reversing and, at the same time, torsional rigidity with low inertia without compromising the high reliability.
The coupling is made in three different and modular elements, in order to obtain high flexibility in assembling and availability. The two shafts are connected to the bellow exploiting a simple mechanic system, easy and safe, by properly sized radial screws and without using bonding agents. In this way the coupling is able to operate and withstand high temperatures, up to 300 °C.
The coupling allows the compensation of all possible misalignments between the two shafts, to be connected in accordance to the values indicated in the table, assuring an infinite number of working cycles.

DIMENSIONING

The coupling's nominal torque must be higher than the maximum torque of the motor shaft, according to the generic formula on page 5.
For further checks it is useful to verify: inertia on acceleration / deceleration, incorrect positioning in case of application when high precision is required, the natural frequency of the application (simplified system with two masses) according to formulas:

$$C_{nom} = C_{ad} \cdot K \cdot \frac{J_{uti}}{J_{mot} + J_{uti}}$$

$$\beta = \frac{180 \cdot C_{mot}}{\pi \cdot R_T}$$

$$F_e = \frac{1}{\pi} \sqrt{R_T \cdot \frac{J_{uti} + J_{mot}}{J_{uti} \cdot J_{mot}}} > 2 \cdot f_{mot}$$

Where:

C_{nom} = nominal torque of the coupling *[Nm]*
C_{ad} = max value between acceleration torque on the motor side and deceleration torque on the user side *[Nm]*
C_{mot} = maximum torque on the motor side *[Nm]*
F_e = system frequency with two masses *[Hz]*
f_{mot} = frequency on the motor side *[Hz]*
J_{mot} = inertia on the motor side *[Kgm²]*
J_{uti} = inertia on the user side *[Kgm²]*
K = load factor
R_t = torsional rigidity of the coupling *[Nm/rad]*
β = rotation angle *[°]*

Load factor (K)
1,5 = continuos load
2 = discontinuous load
2÷3 = machine tools
2,5÷4 = shock load

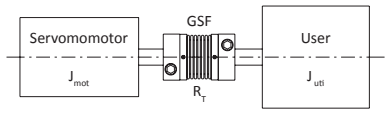

Symplified system with two masses.

FITTING

It is advised to machine the connection's shafts with:

- Surface finish with Ra=1.6 µm.
- Coaxial precision 0.01 mm.
- Nominal tolerance h6.

At first, assemble the coupling by inserting the bellow into the relevant hubs and tighten the screws "S2" in sequence, respecting a cross sequence, continuously until you obtain the tightening torque indicated in the catalogue. Insert one hub on the first shaft along the N length and tighten the clamp locking screw "S1" with a torque wrench, respecting the tightening torque indicated on the catalogue. Leave the second shaft slides on the opposite hub along the whole N length and tighten the clamp locking screw with a torque wrench, respecting the tightening torque indicated on the catalogue.
It is important to consider that misalignments, axial, angular and parallel, must be considered paired together, as inversely proportional (one reduces when the other increases). If all types of misalignments occur, it is necessary that the sum in percentage respect to the maximum value doesn't exceed 100%. If the metallic bellow is damaged, the whole coupling becomes unusable, so it is advised to be very careful in assembling and disassembling the individual components.

GSF - bellow couplings: technical data

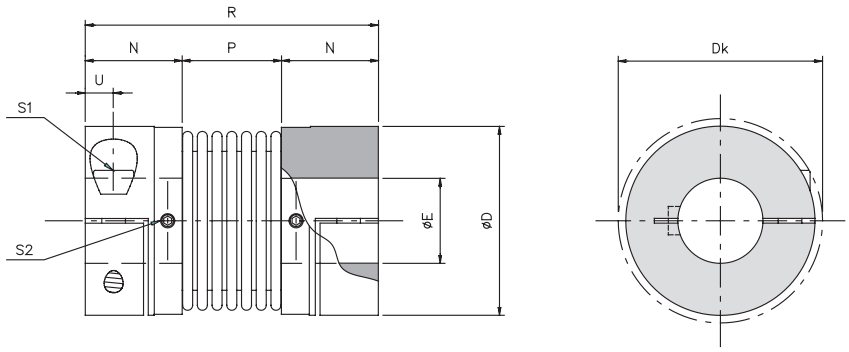

DIMENSIONS

Size	D	Dk	E H7		N	P	R	U
			min	max				
1	34	36	5	16	17	16,5	50,5	5
2	40	44	8	20	20,5	21	62	6
3	55	58	10	30	22,5	27	72	7
4	65	73	14	38	26	32	84	8
5	83	89	14	45	31	41	103	10

TECHNICAL CHARACTERISTICS

Size	Torque *[Nm]*		Weight *[Kg]*	Inertia *[Kgm²]*	Max speed *[Rpm]*	Screws S1	Grub screw S2	Tightening torque		Misalignments			Rigidity		
	nom	max						Screw (S1) *[Nm]*	Grubscrew (S2) *[Nm]*	Angular *α [°]*	Axial *X [mm]*	Radial *K [mm]*	torsional R_T *[10³ Nm/Rad]*	axial R_A *[N/mm]*	radial R_R *[N/mm]*
1	5	10	0,07	0,000014	14000	M4	M3	2,9	0,8	1° 30’	± 0,5	0,20	3,050	30	92
2	15	30	0,14	0,000032	12000	M5	M3	6	0,8	1° 30’	± 0,6	0,20	7,000	45	129
3	35	70	0,29	0,000136	8500	M6	M4	10	2	2°	± 0,8	0,25	16,300	69	160
4	65	130	0,45	0,000302	7000	M8	M4	25	2	2°	± 0,8	0,25	33,000	74	227
5	150	300	0,93	0,001049	5500	M10	M4	49	2	2°	± 1,0	0,30	64,100	87	480

TRASMISSIBLE TORQUE WITH HUB CONNECTION TYPE B

Torque transmitted *[Nm]* according to the ø finished bore *[mm]*																								
Size	5	6	7	8	9	10	11	12	14	15	16	18	19	20	24	25	28	30	32	35	38	40	42	45
1	5	6	7	8	9	10	11	12	14	15	16													
2				13	14	16	18	19	22	24	25	29	30	32										
3							25	27	32	34	36	41	43	45	54	57	63	68						
4										62	67	75	79	83	100	104	116	124	133	145	158			
5												119	125	132	158	165	183	198	211	231	248	263	277	295

APPLICATION EXAMPLE

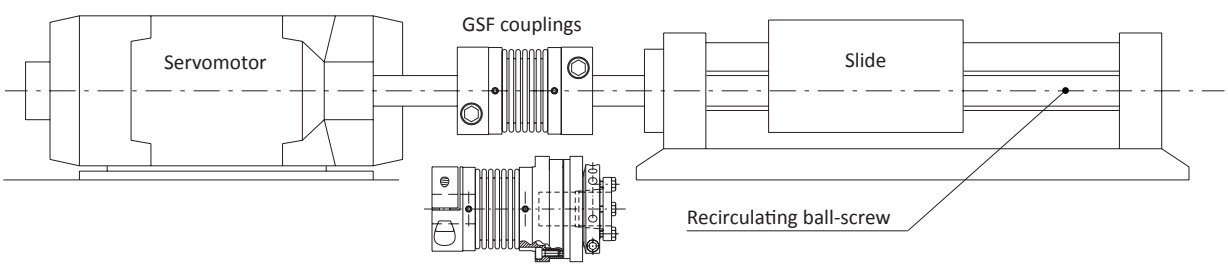

GSF application + DSS/SG torque limiter

▲ On request

NOTES

- Product available only with finished bore.
- the weights refer to the coupling with minimum bore; inertias refer to the coupling with maximum bore.
- **Choice and availability of different hub connection type see pages 4 and 5.**

ComInTec®

GSF - bellow coupling: additional information

ORDER EXAMPLE

BELLOW COUPLING					
Model	Size	● Bore 1	Locking type bore 1	● Bore 2	Locking type bore 2
GSF	**GR.4**	**bore Ø18 H7**	**B**	**bore Ø24 H7**	**B**

Size
from 1 to 5

Locking type
See hub connection type list at page 4

Modello	
GSF	bellow coupling

● Product available only with finished bore.

BACKLASH FREE AND STANDARD JAW COUPLING

Up to 9.600 Nm of torque and 130 mm bore

GAS/SG e GAS

ComInTec®
Technology for Safety

GAS/SG-ST - backlash free jaw coupling «in steel»: introduction

- Made in steel fully turned with standard phosphating treatment.
- Several elastomer hardnesses available (page 27).
- High torsional ridigity.
- Electric insulation between the parts.
- Statically balanced.
- Version with integrated locking assemblies (GAS/SG/CCE page 29).

ON REQUEST

- Conformity to directive ATEX possible.
- Specific surface treatments or fully stainless steel version.
- Customized manufacturing for specific requirements.
- Connection to the Torque limiter's (safety coupling) range possible.

The coupling GAS/SG is an elastomeric coupling with compact dimensions composed of two hubs made in steel UNI EN10083/98, fully turned and one elastomeric element.
The hub's tooth profile is designed to allow the elastomeric element to work only by compression and not in shear, allowing for a longer life of the coupling in high reversal or load applications.
The presence of the elastomer assures:
- the possibility to absorb collisions and vibrations;
- to compensate for unavoidable misalignments between the shafts;
- silence during transmission.

The basic series of GAS/SG is composed of different details that can be assembled together in order to get the right configuration for the application:

- **Hub 1 (M1):** hub base for any type of connection
- **Long hub 1 (M1L):** extended hub for connecting long shafts
- **Hub 2 (M2) :** hub with external diameter lowered for assembly in confined spaces

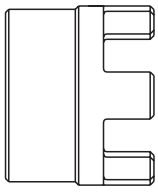

Hub **M1**

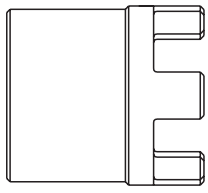

Hub **M1L**

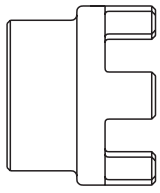

Hub **M2**

DESCRIPTION OF THE ELASTOMERIC ELEMENT

The fundamental item of this coupling is the elastomeric element or elastomer, made in polyurethane and available in several hardness grades, for different uses and applications. The elastomer is manufactured to resist ageing, scoring, fatigue, hydrolysis and UV radiations, promoting longer life operation. It also resists main chemical agents, like ozone, oils, grease and hydrocarbons.
The elastomeric element becomes prestressed during the assembly between the relevant hub's teeth, in order to be able to transmit the motion without backlash, so torsionally rigid inside the prestressing load. The prestressed elastomer's surface is sufficiently wide to induce a low contact pressure on the tooth of the same elastomer, reducing permanent deformations and promoting a long life.

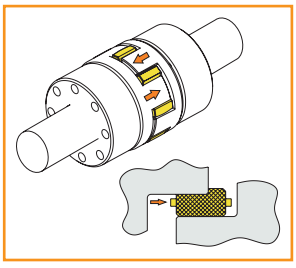

ATEX CONFORMITY

The GAS/SG coupling can be supplied in accordance to directive 94/9/CE ATEX, which is relevant to protection apparatus and systems for use in potentially explosive spaces.
The dimensions of this coupling's version are not different from the standard version.
A mark relevant to the coupling's performances is printed on the hubs. It is necessary to consider planned tests, like those in the use and maintenance manual supplied together with each ATEX coupling.

The elastomeric elements used can be:

- red elastic element in polyurethane, 98 Shore-A : **II 2 G D c T6 -20≤Ta≤+60°C X U**
- yellow elastic element in polyurethane, 92 Shore-A : **II 2 G D c T5 -20≤Ta≤+80°C X U**

GAS/SG-ST - backlash free jaw coupling «in steel»: introduction

SG ELASTIC ELEMENT: PHYSICAL CHARACTERISTICS

Hardness	Material	Spider	Allowed temperature [°C]		Uses
			working	max (for short period)	
92 Sh-A	Polyurethane		-40 ÷ +90	-50 ÷ +120	- low and medium power - measurement and control system - common electric motors
98 Sh-A	Polyurethane		-30 ÷ +90	-40 ÷ +120	- high transmission torque - actuators, screwjacks - servomotors, right angle gearboxes
64 Sh-D	Polyurethane		-20 ÷ +110	-30 ÷ +120	- high torsional rigidity - machining centres - internal combustion motors

SG ELASTOMERIC ELEMENT: TECHNICAL CHARACTERISTICS

Size	Hardness	Torque		Misalignment			Rigidity		
		nom [Nm]	max [Nm]	angular α [°]	axial X [mm]	radial K [mm]	static torsional R_{t}stat [Nm/Rad]	dynamic torsional R_{t}din [Nm/rad]	radial R_{r} [N/mm]
■ **04 (7)**	92 Sh-A	1,2	2,4	1	0,6	0,1	14,5	43	218
	98 Sh-A	2	4	0,9		0,06	23	69,5	420
	64 Sh-D	2,4	4,8	0,8		0,04	34,7	102,5	630
■ **03 (9)**	92 Sh-A	3	6	1	0,8	0,13	31,5	95	270
	98 Sh-A	5	10	0,9		0,08	51,5	155	520
	64 Sh-D	6	12	0,8		0,05	74,5	225	740
01 (14)	92 Sh-A	7,5	15	1°	1	0,14	115	340	330
	98 Sh-A	12,5	25	0° 54’		0,09	170	510	605
	64 Sh-D	16	32	0° 48’		0,06	235	700	855
00 (19)	92 Sh-A	10	20	1°	1,2	0,10	815	1900	1250
	98 Sh-A	17	34	0° 54’		0,06	980	2340	2000
	64 Sh-D	21	42	0° 48’		0,04	1450	4450	2950
0 (24)	92 Sh-A	35	70	1°	1,4	0,14	2300	5120	1900
	98 Sh-A	60	120	0° 54’		0,10	3650	8100	2900
	64 Sh-D	75	150	0° 48’		0,07	4500	11500	4180
1 (28)	92 Sh-A	95	190	1°	1,5	0,15	3810	7280	2100
	98 Sh-A	160	320	0° 54’		0,11	4180	10700	3650
	64 Sh-D	200	400	0° 48’		0,08	7350	18500	4880
2 (38)	92 Sh-A	190	380	1°	1,8	0,16	5580	11950	2850
	98 Sh-A	325	650	0° 54’		0,12	8150	21850	5000
	64 Sh-D	405	810	0° 48’		0,09	9920	33600	6200
3 (42)	92 Sh-A	265	530	1°	2	0,18	9800	20400	4050
	98 Sh-A	450	900	0° 54’		0,15	15000	34000	5900
	64 Sh-D	560	1120	0° 48’		0,10	16000	71300	7570
4 (48)	92 Sh-A	310	620	1°	2,1	0,22	11500	22000	4400
	98 Sh-A	525	1050	0° 54’		0,16	16000	49000	6800
	64 Sh-D	655	1310	0° 48’		0,11	31000	100000	8900
5 (55)	92 Sh-A	410	820	1°	2,2	0,24	12000	22500	3100
	98 Sh-A	685	1370	0° 54’		0,17	24200	62500	7150
	64 Sh-D	825	1650	0° 48’		0,12	42000	111000	9850
6 (65)	92 Sh-A	900	1800	1°	2,6	0,25	38000	97000	6400
	98 Sh-A	1040	2080	0° 54’		0,18	39000	98500	6650

■ Only for GAS/SG-AL version (page 33)

ComInTec®

GAS/SG-ST - backlash free jaw coupling «in steel»: technical data

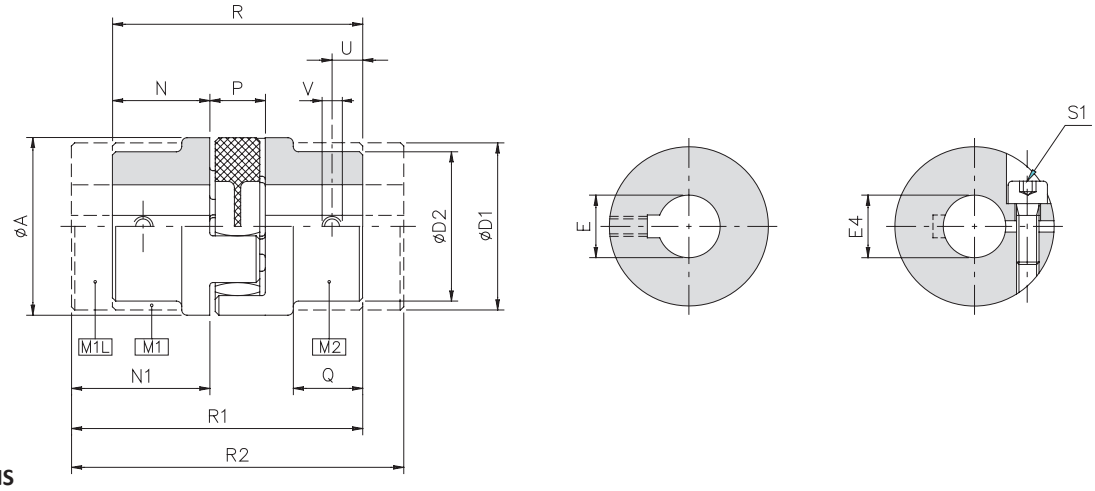

DIMENSIONS

Size	A	D1	D2	EH7 max		E4 H7 max	N	N1	P	Q	R	R1	R2	U	V
				M1	M2	M1									
01 (14)	30	30	-	16	-	15	11	19	13	-	35	42.5	50	5	M4
00 (19)	40	40	32	25	20	20	25	37	16	16,5	66	78	90	10	M5
0 (24)	55	53	40	35	26	30	30	50	18	20	78	98	118	10	M5
1 (28)	65	63	48	40	32	35	35	60	20	24	90	115	140	15	M8
2 (38)	80	78	66	48	44	45	45	70	24	33	114	139	164	15	M8
3 (42)	95	93	75	55	50	50	50	75	26	38	126	151	176	20	M8
4 (48)	105	103	85	62	56	60	56	80	28	45	140	164	188	20	M8
5 (55)	120	118	98	74	65	65	65	90	30	49	160	185	210	20	M10
6 (65)	135	133	115	80	80	70	75	100	35	61	185	210	235	20	M10

TECHNICAL CHARACTERISTICS

Size	Torque *[Nm]*	Weight *[Kg]*				Inertia *[Kgm²]*				Max speed *[Rpm]*	Clamp hub	
		M1	M1L	M2	Stella	M1	M1L	M2	Stella		Screw S1	Tightening torque S1 *[Nm]*
01 (14)	See table of page 27	0,06	0,1	-	0,005	0,00001	0,00001	-	0,0000005	25000	M4	4,4
00 (19)		0,2	0,3	0,2	0,009	0,00005	0,00007	0,00003	0,0000015	19000	M5	8,7
0 (24)		0,4	0,8	0,3	0,020	0,00020	0,00029	0,00014	0,0000080	13500	M6	15
1 (28)		0,7	1,3	0,5	0,030	0,00042	0,00066	0,00027	0,0000180	11800	M8	36
2 (38)		1,3	2,2	1,1	0,060	0,00131	0,00189	0,00091	0,0000500	9500	M8	36
3 (42)		1,9	3,2	1,8	0,098	0,00292	0,00411	0,00178	0,0001000	8000	M10	70
4 (48)		2,8	4,4	2,4	0,105	0,00483	0,00653	0,00297	0,0002000	7100	M12	121
5 (55)		4,0	6,1	3,8	0,150	0,00825	0,01125	0,00505	0,0003000	6300	M12	121
6 (65)		5,9	8,6	4,6	0,200	0,01682	0,02175	0,01037	0,0005000	5600	M12	121

TORQUE PERMISSIBLE WITH HUB CONNECTION TYPE B

Torque transmitted *[Nm]* according to the ø finished bore *[mm]*																												
Grand.	6	8	10	11	12	14	15	16	18	19	20	22	24	25	28	30	32	35	38	40	42	45	48	50	55	60	65	70
01 (14)	21	22	23	24	25	26	27																					
00 (19)			46	47	48	50	52	53	55	56	58																	
0 (24)					76	78	80	81	84	85	87	89	92	93	97	100												
1 (28)									165	167	170	175	179	182	189	194	199	207										
2 (38)											199	204	209	212	219	224	229	237	244	249	254	262						
3 (42)														320	330	337	343	353	363	370	376	386	396	403				
4 (48)																		1408	1445	1469	1494	1530	1567	1592	1653	1714		
5 (55)																					1640	1677	1714	1738	1800	1861	1922	
6 (65)																						1824	1861	1885	1947	2008	2069	2130

NOTES

- The weights refer to the coupling with minimum bore.
- Inertias refer to the coupling with maximum bore.
- **For choice and availability of different hub connection type see pages 4 and 5.**

GAS/SG/CCE-ST - backlash free jaw coupling with external locking assembly «in steel»: technical data

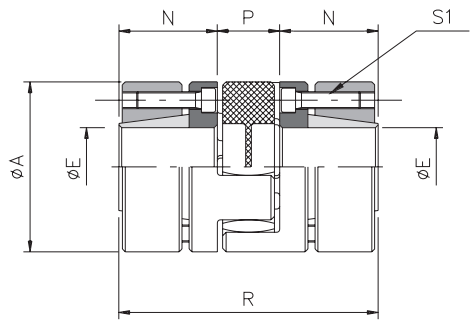

DIMENSIONS

Size	A	EH7		N	P	R
		min	max			
01 (14)	30	6	16	11	13	35
00 (19)	40	10	20	25	16	66
0 (24)	55	15	28	30	18	78
1 (28)	65	19	38	35	20	90
2 (38)	80	20	48	45	24	114
3 (42)	95	28	55	50	26	126
4 (48)	105	35	62	56	28	140
5 (55)	120	35	70	65	30	160
6 (65)	135	40	75	75	35	185

TECHNICAL CHARACTERISTICS

Size	Torque *[Nm]*	Weight *[Kg]*		Inertia *[Kgm²]*		Max speed *[Rpm]*	Clamp hub	
		M1	Spider	M1	Spider		Screw S1 UNI 5931	Tightening torque S1 *[Nm]*
01 (14)	See table of page 27	0,06	0,005	0,00001	0,0000005	25000	N°4 x M2,5	0,75
00 (19)		0,20	0,009	0,00005	0,0000030	19000	N°6 x M4	3
0 (24)		0,40	0,020	0,00020	0,0000100	13500	N°4 x M5	6
1 (28)		0,70	0,030	0,00042	0,0000200	11800	N°8 x M5	6
2 (38)		1,30	0,060	0,00131	0,0000500	9500	N°8 x M6	10
3 (42)		1,90	0,098	0,00292	0,0001000	8000	N°4 x M8	35
4 (48)		2,80	0,105	0,00483	0,0002000	7100	N°4 x M8	35
5 (55)		4,00	0,150	0,00825	0,0003000	6300	N°4 x M10	69
6 (65)		5,90	0,200	0,01682	0,0005000	5600	N°4 x M12	120

TORQUE PERMISSIBLE WITH EXTERNAL LOCKING ASSEMBLY TYPE D

Torque transmitted *[Nm]* according to the ø finished bore *[mm]*																												
Grand.	6	10	11	14	15	16	17	18	19	20	22	24	25	28	30	32	35	38	40	42	45	48	50	55	60	65	70	75
01 (14)	7	12	13	17	18	20																						
00 (19)		48	53	67	72	77	81	86	91	96																		
0 (24)					77	82	88	93	98	103	113	124	129	144														
1 (28)								186	196	206	227	247	258	289	309	330	361	392										
2 (38)										291	320	349	364	408	437	466	510	553	582	612	655	699						
3 (42)													485	545	584	623	681	740	779	818	876	934	973	1071				
4 (48)															584	623	681	740	779	818	876	934	973	1071	1168			
5 (55)																	1091	1184	1247	1309	1402	1496	1558	1714	1870	2026	2182	
6 (65)																			1852	1944	2083	2222	2315	2546	2778	3009	3241	3472

NOTES

- The weights refer to the coupling with minimum bore.
- Inertias refer to the coupling with maximum bore.
- **For choice and availability of different hub connection type see pages 4 and 5.**

GAS-ST - standard jaw coupling «in steel»: introduction

- Made in steel fully turned with standard phosphating treatment.
- Several elastomer hardnesses available (page 31).
- High compensation of misalignments.
- Vibration dampening.
- Statically balanced.
- Modularity of the components, with different assembly versions.

ON REQUEST

- Conformity to ATEX directive possible.
- Specific treatments or version fully in stainless steel.
- Manufacturing made to length and customizations for specific needs.
- Connection to the Torque limiter's (safety coupling) range possible.

The coupling GAS/SG is an elastomeric coupling with compact dimensions composed of two hubs made in steel UNI EN10083/98, fully turned with one elastomer.
The hub's tooth profile is designed to allow the elastomeric element to work only by compression and not in shear, allowing for long life of the coupling in high reversal or load applications.

The GAS base series are available in several hub versions to allow an assembly to suit the application.

- **Hub 1 (M1)** : base hub for any kind of connection.
- **Long hub 1 (M1L)** : extended hub to connect long shafts.
- **Hub 2 (M2)** : hub with reduced external diameter for assembly in compact spaces.
- **Flangie (F)** : flange for connection shaft-flange.

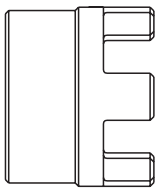
Hub **M1**

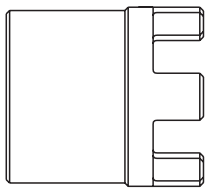
Hub **M1L**

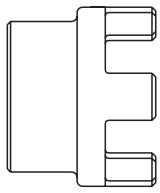
Hub **M2**

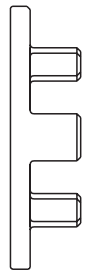
Flangie **F**

DESCRIPTION OF THE ELASTOMERIC ELEMENT

The fundamental item of this coupling is the elastomeric element, made in different grades of hardness for different needs and applications. The elastomer is manufactured from elements to resist ageing, scoring, fatigue, hydrolysis and UV radiations, promoting long life operation and resisting main chemical agents, like ozone, oils, greases and hydrocarbons.

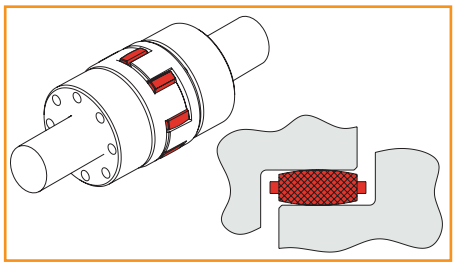

ATEX CONFORMITY

The GAS/SG coupling can be supplied in accordance to ATEX 94/9/CE directive, which is relevant to protection apparatus and systems for use in potentially explosive spaces.
The dimensions of this coupling's version are not different from the standard version.
A mark relevant to the coupling's performances is printed on the hubs. It is necessary to consider planned tests, as described in the use and maintenance manual supplied together with each ATEX coupling.

The elastomeric elements used can be:

- yellow elastic element in polyurethane, 92 Shore-A : **II 2 G D c T5 -20≤Ta≤+80°C X U**

GAS-ST - standard jaw coupling «in steel»: introduction

SG ELASTIC ELEMENT: PHYSICAL CHARACTERISTICS

Hardness	Material	Spider	Allowed temperature *[°C]*		Users
			working	max (for short periods)	
92 Sh-A	Polyurethane		-40 ÷ +90	-50 ÷ +120	- low and medium power - systems with frequent starts
95 Sh-A **98 Sh-A**	Thermoplastic		-40 ÷ + 125	-50 ÷ +150	- high transmission torque - high temperature range
64 Sh-D	Polyurethane		-20 ÷ +110	-30 ÷ +120	- high torsional rigidity - Internal combustion motors

SG ELASTIC ELEMENT: TECHNICAL CHARACTERISTICS

Size	Hardness	Torque			Misalignments			Rigidity R_T *[10^3 Nm/rad]*			
		nom *[Nm]*	max *[Nm]*	alternate motion *[Nm]*	Angular *α [°]*	Axial *X [mm]*	Radial *K [mm]*	25% nom torque	50% nom torque	75% nom torque	100% nom torque
00 (19)	92 Sh-A	10	20	2,6	1° 18’	1,0	0,20	0,62	0,73	0,93	1,18
	98 Sh-A	17	34	4,4				0,92	1,14	1,33	1,49
	64 Sh-D	21	42	5,5				1,97	3,33	4,40	5,37
0 (24)	92 Sh-A	35	70	9	1° 18’	1,0	0,22	2,44	2,71	3,66	4,43
	98 Sh-A	60	120	16				3,64	4,74	5,47	5,92
	64 Sh-D	75	150	19,5				5,50	9,35	12,40	15,10
1 (28)	92 Sh-A	95	190	25	1° 18’	1,2	0,25	4,10	5,73	6,62	7,65
	98 Sh-A	160	320	42				6,08	7,82	8,88	10,68
	64 Sh-D	200	400	52				10,10	17,00	22,55	27,50
2 (38)	92 Sh-A	190	380	49	1° 18’	1,4	0,28	8,69	10,75	12,55	14,57
	98 Sh-A	325	650	85				10,95	14,13	18,25	21,90
	64 Sh-D	405	810	105				25,75	43,50	57,50	70,10
3 (42)	92 Sh-A	265	530	69	1° 18’	1,6	0,32	11,52	14,66	17,27	21,50
	98 Sh-A	450	900	117				16,34	21,41	25,17	30,29
	64 Sh-D	560	1120	145				29,30	49,50	65,45	79,85
4 (48)	92 Sh-A	310	620	81	1° 18’	1,7	0,36	11,85	18,72	21,34	24,52
	98 Sh-A	525	1050	137				17,97	24,39	27,68	34,14
	64 Sh-D	655	1310	170				35,10	59,20	78,30	95,50
5 (55)	92 Sh-A	410	820	105	1° 18’	1,8	0,38	16,63	26,27	29,94	34,42
	98 Sh-A	685	1370	178				24,88	33,77	38,33	47,27
	64 Sh-D	825	1650	215				39,65	66,90	88,55	107,90
6 (65)	92 Sh-A	625	1250	163	1° 18’	2,0	0,42	27,14	38,00	40,71	50,67
	98 Sh-A	940	1880	245				36,00	48,01	55,55	66,47
	64 Sh-D	1175	2350	305				55,54	93,65	124,00	150,10
7 (75)	92 Sh-A	975	1950	254	1° 18’	2,5	0,48	54,17	70,10	89,38	103,63
	98 Sh-A	1465	2930	381				72,52	92,30	112,81	123,07
	64 Sh-D	2410	4820	625				91,21	153,87	203,51	249,12
8 (90)	92 Sh-A	2400	4800	624	1° 18’	2,8	0,50	88,99	113,90	164,29	177,98
	98 Sh-A	3600	7200	936				127,47	172,99	201,82	230,65
	64 Sh-D	4500	9000	1170				246,85	415,53	550,13	672,87
9 (100)	95 Sh-A	3300	6600	858	1° 18’	3,0	0,52	95,09	157,88	210,55	255,82
10 (110)	95 Sh-A	4800	9600	1248	1° 18’	3,2	0,55	115,44	195,24	256,41	315,42

GAS-ST - standard jaw coupling «in steel»: technical data

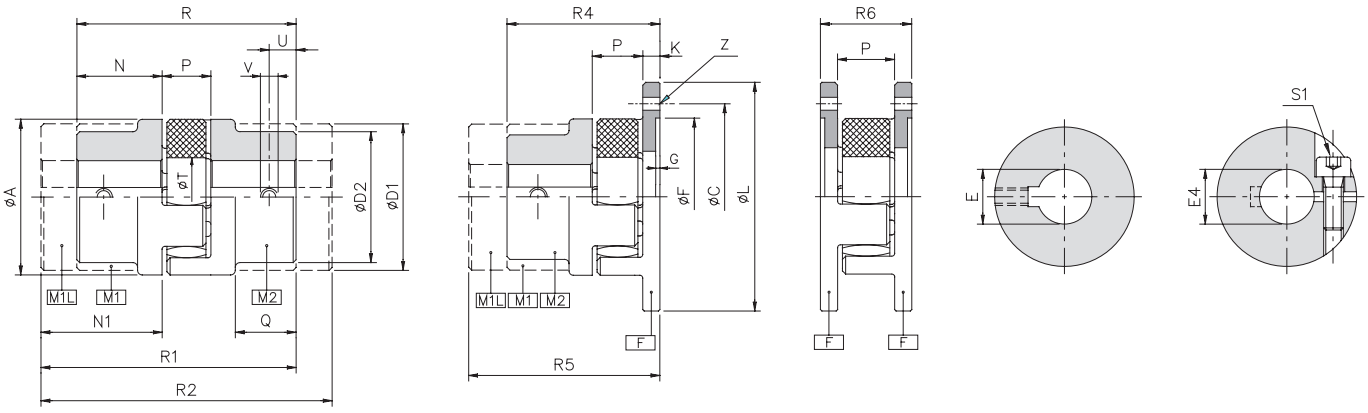

DIMENSIONS

Size	A	C	D1	D2	E H7 max		E4 H7 max	F H7	G	L	K	N	N1	P	Q	R	R1	R2	R4	R5	R6	T	U	V	Z
					M1	M2	M1																		
00 (19)	40	50	40	32	25	20	20	40	1,5	58	8	25	37	16	16,5	66	78	90	49	61	32	18	10	M5	n.5 x ø4,5
0 (24)	55	65	53	40	35	26	30	55	1,5	74	8	30	50	18	20	78	98	118	56	76	34	27	10	M5	n.5 x ø4,5
1 (28)	65	80	63	48	40	32	35	65	1,5	92	10	35	60	20	24	90	115	140	65	90	40	30	15	M8	n.6 x ø6,6
2 (38)	80	95	78	66	48	44	45	80	1,5	107	10	45	70	24	33	114	139	164	79	104	44	38	15	M8	n.6 x ø6,6
3 (42)	95	115	93	75	55	50	50	95	2	132	12	50	75	26	38	126	151	176	88	113	50	46	20	M8	n.6 x ø9
4 (48)	105	125	103	85	62	56	60	105	2	142	12	56	80	28	45	140	164	188	96	120	52	51	20	M8	n.8 x ø9
5 (55)	120	145	118	98	74	65	65	120	2	164	16	65	90	30	49	160	185	210	111	136	62	60	20	M10	n.8 x ø11
6 (65)	135	160	133	115	80	80	70	135	2	179	16	75	100	35	61	185	210	235	126	151	67	68	20	M10	n.10 x ø11
7 (75)	160	185	158	135	95	95	-	160	2,5	215	19	85	110	40	69	210	235	260	144	169	78	80	25	M10	n.10 x ø14
8 (90)	200	225	180	160	110	110	-	200	3	246	20	100	125	45	81	245	270	295	165	190	85	100	30	M12	n.12 x ø14
▲ **9 (100)**	225	250	-	180	-	120	-	225	4	285	25	110	-	50	89	270	-	-	185	-	100	113	30	M12	n.12 x ø14
▲ **10 (110)**	255	290	-	200	-	130	-	255	4	330	26	120	-	55	96	295	-	-	201	-	157	127	35	M16	n.12 x ø18

TECHNICAL CHARACTERISTICS

Size	Torque [Nm]	Weight [Kg]					Inertia [Kgm²]					Max speed [Rpm]	Clamp hub	
		M1	M1L	M2	F	Stella	M1	M1L	M2	F	Stella		Screw S1	Tightening torque S1 [Nm]
00 (19)	See table at page 31	0,2	0,3	0,2	0,1	0,009	0,00005	0,00007	0,00003	0,00007	0,000003	19000	M5	10,5
0 (24)		0,4	0,8	0,3	0,3	0,020	0,00020	0,00029	0,00010	0,00014	0,000010	13500	M6	17,5
1 (28)		0,7	1,3	0,5	0,6	0,030	0,00042	0,00066	0,00022	0,00044	0,000020	11800	M8	28
2 (38)		1,3	2,2	1,1	0,9	0,060	0,00131	0,00189	0,00089	0,00121	0,000050	9500	M8	28
3 (42)		1,9	3,2	1,8	1,6	0,098	0,00292	0,00411	0,00232	0,00246	0,000100	8000	M10	84
4 (48)		2,8	4,4	2,4	1,8	0,105	0,00483	0,00653	0,00383	0,00302	0,000200	7100	M12	145
5 (55)		4,0	6,1	3,8	3,0	0,150	0,00825	0,01125	0,00740	0,00740	0,000300	6300	M12	145
6 (65)		5,9	8,6	4,6	3,7	0,200	0,01682	0,02175	0,01087	0,01087	0,000500	5600	M12	145
7 (75)		9,1	13	7,2	5,2	0,380	0,03933	0,04915	0,02393	0,02333	0,002000	4750	-	-
8 (90)		17,0	22	12,5	8,3	0,650	0,10936	0,09293	0,08484	0,06036	0,004000	3750	-	-
▲ **9 (100)**		-	-	25	10,5	0,850	-	-	0,11450		0,006000	3350	-	-
▲ **10 (110)**		-	-	35	18,0	1,250	-	-	0,20120		0,011000	3000	-	-

TORQUE PERMISSIBLE WITH HUB CONNECTION TYPE B

Torque transmitted [Nm] according to the ø finished bore [mm]																											
Grand.	10	11	12	14	15	16	18	19	20	22	24	25	28	30	32	35	38	40	42	45	48	50	55	60	65	70
00	46	47	48	50	52	53	55	56	58																	
0			76	78	80	81	84	85	87	89	92	93	97	100												
1							165	167	170	175	179	182	189	194	199	207										
2									199	204	209	212	219	224	229	237	244	249	254	262						
3												320	330	337	343	353	363	370	376	386	396	403				
4																1408	1445	1469	1494	1530	1567	1592	1653	1714		
5																			1640	1677	1714	1738	1800	1861	1922	
6																				1824	1861	1885	1947	2008	2069	2130

NOTES

▲ On request

- The weights refer to the coupling with minimum bore.
- Inertias refer to the coupling with maximum bore.
- **For choice and availability of different hub connection type see pages 4 and 5.**

GAS/SG-AL & GAS-AL - backlash free and standard jaw coupling «in aluminium»: technical data

- Made in aluminum fully turned.
- Elastomer available in different hardness (see pages 24 and 31).
- Weight and inertia reduced.
- Electrical insulation between the parties.
- Statically balanced.
- Modular components with different locking systems on the hubs.

ON REQUEST

- Single split clamp hub with H7 bore and keyway (type B1).
- Two piece clamp hub with H7 bore and keyway (type C1)
- Conformity to Directive ATEX possible.
- Customized manufacturing for specific requirements.

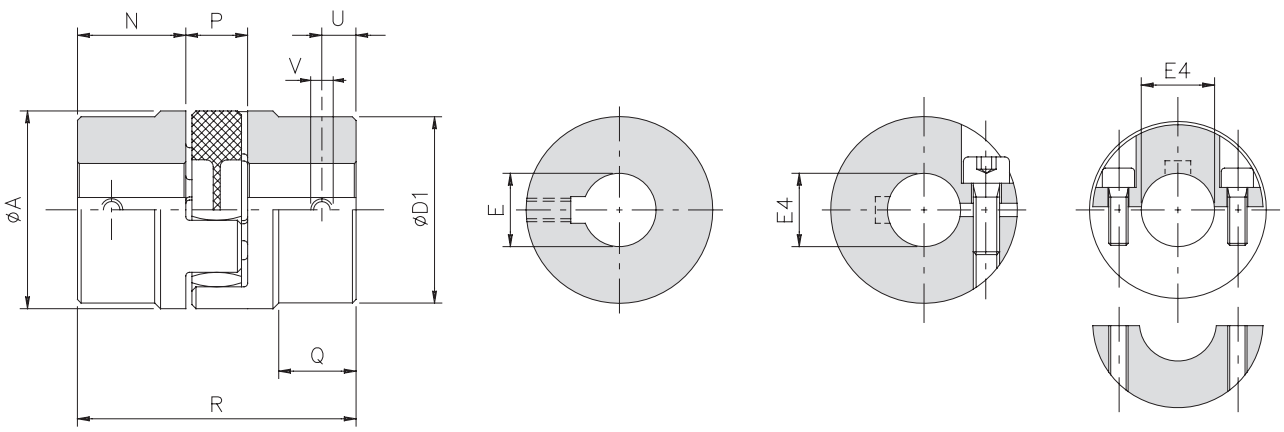

DIMENSIONS

Size	Torque [Nm]	A	D1	EH7 max	E4 H7 max	N	P	Q	R	U	V	Weight [Kg]		Inertia [10⁻³ Kgm²]		Max speed [Rpm]	Clamp hub	
				M1	M1							M1	Spider	M1	Spider		Screw	Tightening torque [Nm]
04 (7)	GAS/SG-AL see page 27 GAS-AL see page 31	14	-	7	6	7	8	-	22	3,5	M3	0,003	0,0007	0,000085	0,000015	34000	M2,5	0,8
03 (9)		20	-	9	9	10	10	-	30	4	M4	0,009	0,002	0,000500	0,000080	22000	M3	1,4
01 (14)		30	-	16	15	11,5	12	-	35	5	M4	0,02	0,005	0,002800	0,000500	19000	M4	3,1
00 (19)		40	-	25	20	25	16	-	66	10	M5	0,07	0,009	0,020500	0,001500	14000	M5	6,2
0 (24)		55	53	35	30	30	18	20	78	10	M5	0,13	0,020	0,050000	0,008000	10500	M6	10,5
1 (28)		65	63	40	35	35	20	24	90	15	M8	0,26	0,030	0,200000	0,018000	9000	M8	25
2 (38)		80	78	48	45	45	24	33	114	15	M8	0,46	0,060	0,400000	0,050000	7000	M8	25

TORQUE PERMISSIBLE WITH HUB CONNECTION TYPE B

Torque transmitted [Nm] according to the ø finished bore [mm]																									
Size	3	4	6	8	9	10	11	12	14	15	16	18	19	20	22	24	25	28	30	32	35	38	40	42	45
04 (7)	1,4	1,6	1,8																						
03 (9)		3,1	3,5	3,8	4																				
01 (14)			9	10	10	10,5	11	11,5	12	12,5															
00 (19)						21	21	22	23	24	24	25	26	26											
0 (24)								35	36	37	37	38	39	40	41	42	43	45	46						
1 (28)												80	81	82	84	87	88	92	94	97	100				
2 (38)														97	99	101	103	106	109	111	115	118	121	123	127

NOTES

- The weights refer to the coupling with minimum bore.
- Inertias refer to the coupling with maximum bore.
- **For choice and availability of different hub connection type see pages 4 and 5.**

GAS/SG/DBSE-AL - backlash free jaw coupling with spacer «in aluminium»: technical data

- Made of aluminum fully turned.
- Elastomer available in different hardness (see pages 25 and 29).
- Simple mounting thanks to the two piece clamp hub (type C).
- Radial assembly without removing the parts.
- Electrical insulation between the parts.
- Spacer with DBSE custom made.

ON REQUEST

- Two piece clamp hub with keyway (C1).
- Various hub connection types available.
- Conformity to Directive ATEX possible.
- Dynamic balancing up to Q=2.5.

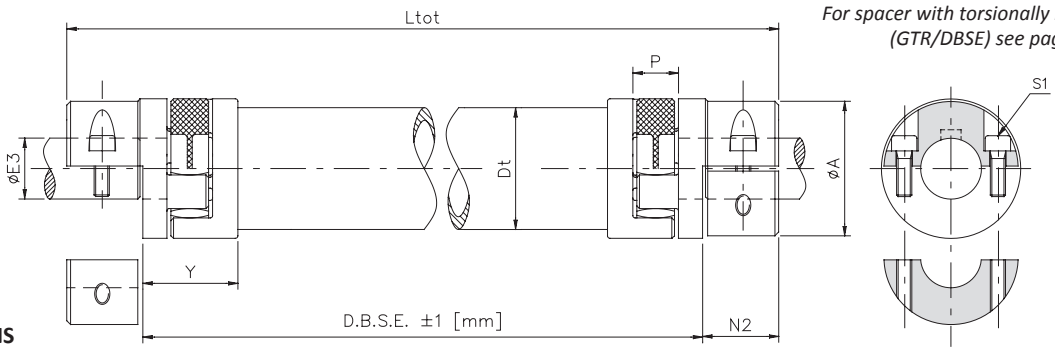

For spacer with torsionally rigid coupling (GTR/DBSE) see page 12.

DIMENSIONS

Size	Torque [Nm]	A	E3 H7 max	N2	P	Y	Spacer				Total weight [Kg]	L_{tot} [mm]	DBSE min [mm]	E4 H7 max	
							Dt	Weight [Kg/m]	Inertia [10^{-3} Kg/m]	Rigidity $R_T$rel [10^3 Nm/rad•m]				Screw S1	Tightening torque [Nm]
01 (14)	See page 27	30	15	14	12	20,5	30	1,06	0,162	1552	Total weight = 2 • weight [GAS/SG-AL] + spacer weight • (DBSE - 2Y)	L_{tot} = DBSE + 2 N2	58	M4	3,1
00 (19)		40	20	19	16	30,5	35	1,27	0,273	2650			95	M5	6,2
0 (24)		55	30	22	18	37,5	50	1,91	0,917	8800			113	M6	10,5
1 (28)		65	35	25	20	41	60	3,34	2,184	21150			131	M8	25
2 (38)		80	45	34	24	46	70	5,09	4,341	42400			161	M8	25

TORQUE PERMISSIBLE WITH HUB CONNECTION TYPE C

Torque transmitted [Nm] according to the ø finished bore [mm]																						
Size	6	8	10	11	12	14	15	16	18	19	20	22	24	25	28	30	32	35	38	40	42	45
01 (14)	6	9	11	12	13	15	16															
00 (19)			17	19	21	24	26	28	31	33	35											
0 (24)					24	28	30	32	36	38	40	44	47	49	55	59						
1 (28)									69	73	77	85	92	96	108	115	123	135				
2 (38)											77	85	92	96	108	115	123	135	146	154	162	173

PERMITTED SPEEDS

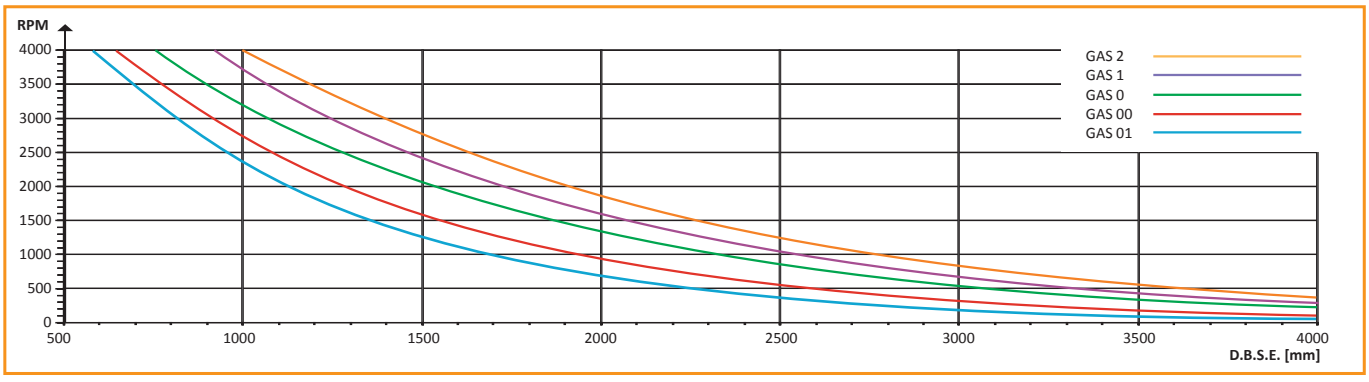

NOTES

- The weights refer to the coupling with minimum bore.
- Inertias refer to the coupling with maximum bore.
- **For choice and availability of different hub connection type see pages 4 and 5.**

GAS/SG/DBSE-AL - backlash jaw coupling with spacer «in aluminium»: additional information

APPLICATION EXAMPLE

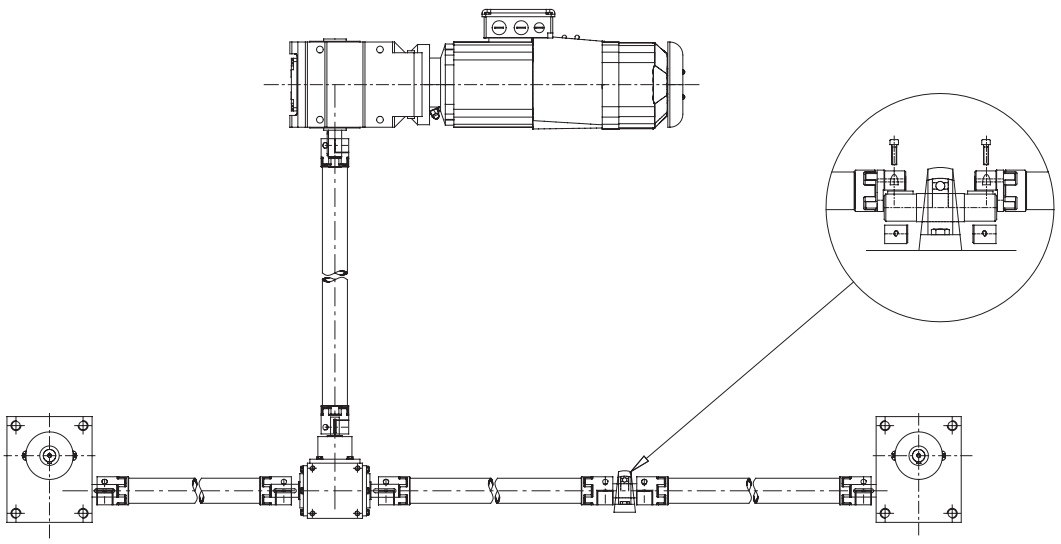

For DBSE> 3 m with high speed, it is necessary to use an intermediate shaft with support and bearing.

The model with a central spacer "GAS / SG / DBSE-AL", in addition to being essential for connecting transmission drives spaced apart. Is able (unlike the classic model GAS/SG) to recover, as needed, up to twice the angular misalignment (picture 2) and axial (picture 3) or a high radial misalignment (picture 1) according to the formula:

$$K = [\ L_{tot} - (2 \cdot N) - P\ ] \cdot Tg\ \alpha$$

Where:
- K = radial misalignment *[mm]*
- L_{tot} = total length of GAS/DBSE coupling *[mm]*
- N = useful length of an half-hub *[mm]*
- P = useful space of the elastomeric element *[mm]*
- α = angular misalignment *[°]*

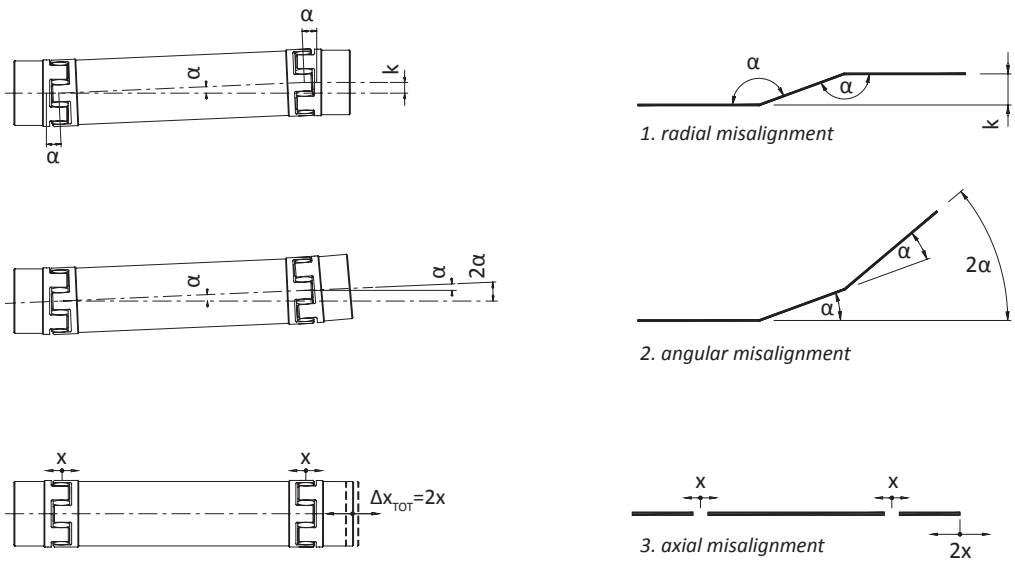

It is possible to determine also the positioning error by the torsion angle according to the formula:

$$\beta = \frac{180 \cdot C_{mot}}{\pi \cdot R_{TOT}}$$

Where:
- β = torsion angle *[°]*
- C_{mot} = maximum torque motor side *[Nm]*
- R_{TOT} = total torsional rigidity of the coupling *[Nm/rad]*

In case of GAS/SG/DBSE-AL the total torsional rigidity of the coupling is expressed by the formula:

$$R_{TOT} = \frac{1}{\left(\frac{2}{R_T} + \frac{L_t}{R_T rel}\right)}$$

Where:
- R_{TOT} = total torsional rigidity *[Nm/rad]*
- R_T = torsional rigidity of spider *[Nm/rad]*
- $R_T rel$ = torsional rigidity of spacer *[Nm/rad]*
- L_t = spacer length (=DBSE-2Y) *[m]*

GAS/SG & GAS - backlash free and standard jaw coupling: selection for motors

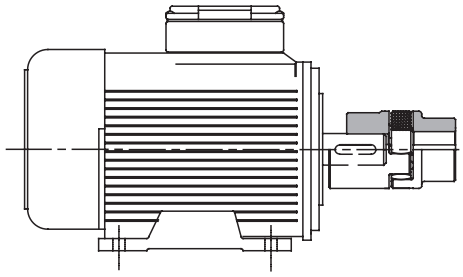

Electric motor		750 Rpm					1000 Rpm					1500 Rpm					3000 Rpm				
Size IEC	Shaft	P [Kw]	C [Nm]	GAS 92 Sh-A	GAS 98 Sh-A	GAS 64 Sh-D	P [Kw]	C [Nm]	GAS 92 Sh-A	GAS 98 Sh-A	GAS 64 Sh-D	P [Kw]	C [Nm]	GAS 92 Sh-A	GAS 98 Sh-A	GAS 64 Sh-D	P [Kw]	C [Nm]	GAS 92 Sh-A	GAS 98 Sh-A	GAS 64 Sh-D
56	**Ø9x20**	-	-	-	-	-	0,037 0,045	0,43 0,52	■ 03	■ 03	■ 03	0,06 0,09	0,43 0,64	■ 03	■ 03	■ 03	0,09 0,12	0,32 0,41	■ 03	■ 03	■ 03
63	**Ø11x23**	-	-	-	-	-	0,06 0,09	0,7 1,1	01	01	01	0,12 0,18	0,88 1,30	01	01	01	0,18 0,25	0,62 0,86	01	01	01
71	**Ø14x30**	0,09 0,12	1,4 1,8	01	01	01	0,18 0,25	2,0 2,8	01	01	01	0,25 0,37	1,80 2,50	01	01	01	0,37 0,55	1,30 1,90	01	01	01
80	**Ø19x40**	0,18 0,25	2,5 3,5	00	00	00	0,37 0,55	3,9 5,8	00	00	00	0,55 0,75	3,70 5,10	00	00	00	0,75 1,10	2,50 3,70	00	00	00
90 S	**Ø24x50**	0,37	5,3	00	00	00	0,75	8,0	0	00	00	1,10	7,50	0	00	00	1,50	5,00	00	00	00
90 L	**Ø24x50**	0,55	7,9	0	00	00	1,10	12	0	0	0	1,50	10	00	00	00	2,20	7,40	0	00	00
100 L	**Ø28x60**	0,75 1,10	11 16	0	0	0	1,50	15	0	0	0	2,20 3,00	15 20	0	0	0	3,00	9,80	0	0	0
112 M	**Ø28x60**	1,50	21	0	0	0	2,20	22	0	0	0	4,00	27	1	0	0	4,00	13	0	0	0
132 S	**Ø38x80**	2,20	30	1	1	1	3,00	30	1	1	1	5,50	36	1	1	1	5,50 7,50	18 25	1	1	1
132 M	**Ø38x80**	3,00	40	1	1	1	4,00 5,50	40 55	1	1	1	7,50	49	1	1	1	-	-	-	-	-
160 M	**Ø42x110**	4,00 5,50	54 74	2	2	2	7,50	75	2	2	2	11,00	72	2	2	2	11,00 15,00	35 19	2	2	2
160 L	**Ø42x110**	7,50	100	2	2	2	11,00	109	2	2	2	15,00	98	2	2	2	18,50	60	2	2	2
180 M	**Ø48x110**	-	-	-	-	-	-	-	-	-	-	18,50	121	2	2	2	22	71	2	2	2
180 L	**Ø48x110**	11,00	145	3	2	2	15,00	148	3	2	2	22	148	3	2	2	-	-	-	-	-
200 L	**Ø55x110**	15,00	198	4	3	3	18,50 22,00	181 215	4	3	3	30	196	4	3	3	30 37	97 120	3	3	3
225 S	**Ø55x110** **Ø60x140**	18,50	244	4 4	3 4	3 4	-	-	-	-	-	37	240	4 4	3 4	3 4	-	-	-	-	-
225 M	**Ø55x110** **Ø60x140**	22	290	4 4	3 4	3 4	30	293	4 4	3 4	3 4	45	292	4 4	3 4	3 4	45	145	3 3	3 4	3 4
250 M	**Ø60x140** **Ø65x140**	30	392	6 6	5 5	4 5	37	361	6 6	5 5	4 5	55	356	6 6	4 5	4 5	55	177	4 5	4 5	4 5
280 S	**Ø65x140** **Ø75x140**	37	483	6	6	5	45	438	6	5	5	75	484	6	5	5	75	241	5	5	5
280 M	**Ø65x140** **Ø75x140**	45	587	6	6	6	55	535	6 6	6 6	5 6	90	581	6	6	6	90	289	5 5	5 6	5 6
315 S	**Ø65x140** **Ø80x170**	55	712	8	7	6	75	727	8	7	6	110	707	8	7	6	110 -	353 -	6 6	5 6	5 6
315 M	**Ø65x140** **Ø80x170**	75	971	8	7	7	90	873	8 8	7 7	7 7	132	849	8	7	7	132	423	7 7	6 6	5 6
315 L	**Ø65x140** **Ø80x170** **Ø85x170**	90 110 132	1170 1420 1710	8 8 10	8 8 8	7 8 8	110 132 160	1070 1280 1550	8 8 8	8 8 8	7 7 7	160 200 -	1030 1290 -	8 - -	8 - -	7 - -	160 200 -	513 641 -	7 7 -	6 6 -	5 6 -
315	**Ø65x140** **Ø85x170**	160 200	2070 2580	10 -	8 10	8 8	200 250	1930 2410	10 10	8 8	8 8	250 315	1600 2020	8	8	7 8	250 315	802 1010	8 8	7 8	7 7
355	**Ø75x140** **Ø95x170**	- 250 315	- 3220 4060	- - -	- 10 -	- 10 -	- 315 400	- 3040 3850	- - -	- 10 -	- 8 -	355 400 500	2280 2570 3210	9 - -	8 10 10	8 8 10	355 400 500	1140 1280 1600	8 8 8	8 8 8	7 7 7
400	**Ø80x170** **Ø110x210**	355 400	4570 5150	- -	- -	- -	450 500	4330 4810	- -	- -	- -	560 630	3580 4030	- -	- -	- -	560 630	1790 2020	8	8	8

■ Only for GAS/SG-AL version (page 33)

NOTES

- For the choice of the coupling, is considered a safety factor of 1,5 on the nominal torque and an ambient temperature of 27 °C

GAS/SG & GAS - backlash free and standard jaw coupling: additional information

APPLICATION EXAMPLE

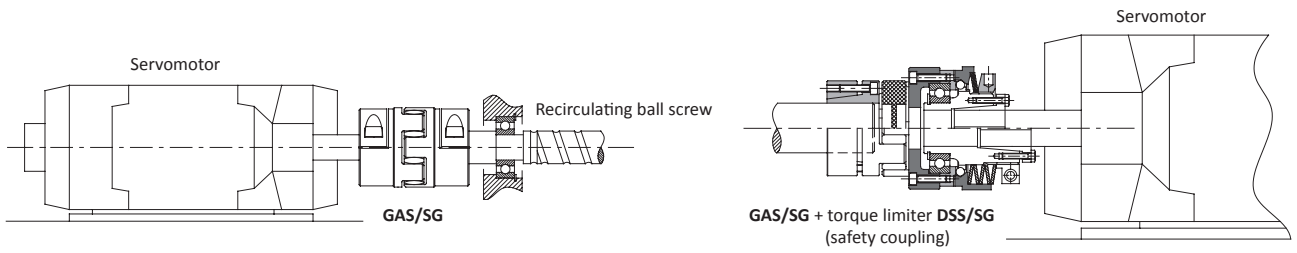

DIMENSIONING

For pre-selection of the coupling's size you can use the generic formula indicated on page 6.
Having established the coupling's size to be used, it is possible to make other checks considering further parameters:

$$C_{nom} > C_{mot} \bullet f_T \bullet f_R$$

$$C_{max} = C_{SM} \bullet \frac{J_{uti}}{J_{mot} + J_{uti}} \bullet K \bullet f_T \bullet f_A + C_{mot} \bullet f_T \bullet f_R$$

$$C_{nom} = C_{SU} \bullet \frac{J_{uti}}{J_{mot} + J_{uti}} \bullet K \bullet f_T \bullet f_A + C_{mot} \bullet f_T \bullet f_R$$

Dove:
C_{nom} = theoretic nominal torque of the coupling *[Nm]*
C_{mot} = nominal torque motor side *[Nm]*
C_{max} = maximum torque of the coupling *[Nm]*
C_{SU} = static torque user side *[Nm]*
C_{SM} = static torque motor side [Nm]
f_A = starting frequency factor
f_R = rigidity factor
f_T = thermic factor
J_{mot} = inertia motor side [Kgm²]
J_{uti} = inertia user side [Kgm²]
K = shock factor

$$C_{nom} > \frac{1}{M} \bullet C_{alt} \bullet f_F \bullet f_T \bullet f_R$$

Dove:
C_{alt} = alternate system torque *[Nm]*
C_{nom} = theoretic nominal torque of the coupling *[Nm]*
f_F = resonance factor
f_R = rigidity factor
f_T = thermic factor
M = coefficient of material

Coefficient of material (M)
0,25 = aluminium
0,35 = steel

Resonance factor (f_F)
1 = frequency < 10
$\sqrt{f/10}$ = frequency > 10

Rigidity factor (f_R)
2÷5 = positioning system
3÷8 = tool machines
>10 = turn indicator

Shock factor (K)
1 = light shock
1,4 = medium shock
1,8 = hard shock

Thermic factor (f_T)
1 = -30 ÷ +30 °C
1,2 = +40 °C
1,4 = +60 °C
1,8 = +80 °C

Starting frequency factor (f_A)
1 = 0 ÷ 100 starting each hour
1,2 = > 100 ÷ 200 " "
1,4 = > 200 ÷ 400 " "
1,6 = > 400 ÷ 800 " "
1,8 = > 800 ÷ 1600 " "

Completed and verified the choice of the coupling respect the torque to be transmitted, it is necessary to consider the flexibility, comparing the misalignment allowed by the type of coupling chosen with the real ones provided by the shafts to be connected. If simultaneously present at all types of misalignment, it is necessary that the sum as a percentage of the maximum value does not exceed 100%, according to the graphic 1.

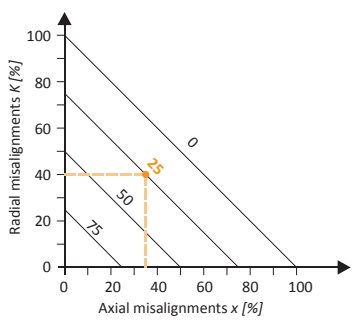

1. Allowed ratio between misalignments [%]

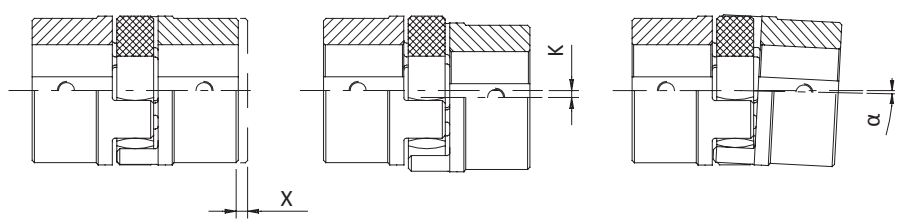

GAS/SG & GAS - backlash free and standard jaw coupling: additional information

FITTING

This coupling does not require particular procedures for assembly. It can be assembled both vertically and horizontally.

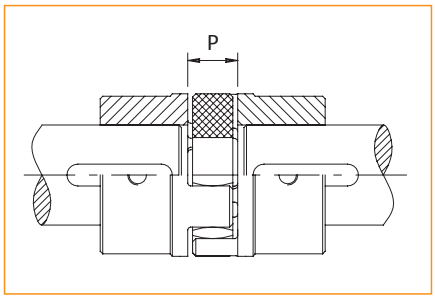

1) Achieve radial and axial alignments as precisely as possible, in order to have maximum absorption of possible misalignments and life of the coupling.
2) Assemble the two half-hubs on the shafts. Check that the external parts of the two shafts do not exceed the relevant half-hub's surface (quote “N”) and fix this one to the shaft with its relevant fixing system.
3) Assemble the elastomeric element on one half-hub and close the other inserting the relevant teeths into the elastomeric element, being careful to respect the distance of the two half-hubs indicated on the catalogue, quote “P”.

In case of connection by clamp locking or locking assemblies, tighten the relevant screws progressively up to the tightening torque indicated in the catalogue, using a cross sequence.

ORDER EXAMPLE OF COMPLETE COUPLING

JAW COUPLING									
Model	Material	Size	Version	Bore 1	Locking type bore 1	Bore 2	Locking type bore 2	● DBSE / L_{tot}	Elastic element
GAS	**ST**	**GR.4**	**M1-M1**	**bore Ø40 H7**	**B1**	**bore Ø40 H7**	**B1**	**-**	**Red spider 98 Sh-A**

Model	
GAS	jaw coupling
GAS/SG	backlash free jaw coupling
● GAS/DBSE	jaw coupling with spacer
● GAS/SG/DBSE	backlash free jaw coupling with spacer

Material	
ST	steel
AL	aluminium
SS	stainless steel

Size
from 04 to 10

Version
M1-M1
M1-M1L
M1-M2
M1-F
M1L-M1
M1L-M1L
M1L-M2
M1L-F
M2-M1
M2-M1L
M2-M2
M2-F
F-M1
F-M1L
F-M2
F - F

Locking type
see hub connection type list at page 4

For GAS - GAS/DBSE
yellow spider 92 Sh-A
red spider 98 Sh-A
green spider 64 Sh-D
For GAS/SG - GAS/SG/DBSE
yellow spider SG 92 Sh-A
red spider SG 98 Sh-A
green spider SG 64 Sh-D

● In case of GAS/DBSE & GAS/SG/DBSE model indicate the length or spacer "DBSE" or total coupling length "L_{tot}".
Example DBSE = 250mm / L_{tot} = 300mm

ORDER EXAMPLE OF INDIVIDUAL COMPONENTS

INDIVIDUAL COMPONENTS OF JAW COUPLING				
Component	Material	Size	Bore H7	Locking type
Hub GAS M1	**ST**	**Size 4**	**Bore Ø54 H7**	**C**

Component
hub GAS M1
hub GAS M1L
hub GAS M2
flangie GAS F
hub GAS/SG M1
hub GAS/SG M1L
hub GAS/SG M2
yellow spider 92 Sh-A
red spider 98 Sh-A
green spider 64 Sh-D
yellow spider SG 92 Sh-A
red spider SG 98 Sh-A
green spider SG 64 Sh-D

Material	
ST	steel
AL	aluminium
SS	stainless steel

Size
from 04 to 10

Locking type
see hub connection type list at page 4

COMPACT ELASTIC COUPLING

Up to 35.000 Nm of torque and 180 mm bore

GEC

ComInTec®
Technology for Safety

GEC - compact elastic coupling: introduction

- Made in steel fully turned with standard treatment of phosphating.
- Maintenance without removing the coupling
- Suitable for working in high temperatures.
- Statically balanced, suitable to absorb vibrations.
- Highest protection.
- Excellent value torque/dimensions.

ON REQUEST

- Various hub connection type available.
- Specific treatments or aluminum version fully turned available.
- Customized versions for specific needs including hub/flange connection.
- Connection to the Torque limiter's (safety coupling) range possible.

The GEC coupling is composed of two hubs in steel UNI EN10083/98 fully turned. These two hubs are connected by radial pins, made in steel with high resistanceand seated within the elastomeric elements.
These pins, with their relevant elastomeric elements, are protected by an external band, allowing the coupling a high grade of protection.
This construction feature allows the user to be able to perform maintenance, by substituting the elastic elements, without the need to move the two transmission hubs/shafts, reducing maintenance times and optimizing the plant productivity.
Particularly suitable for connecting Pelton turbines, for the coupling between engines and worm compressors and in general for transmission where safety is highly necessary without compromising the quality and effectiveness of the same transmission.

DESCRIPTION OF THE ELASTOMERIC ELEMENT

The main features that distinguish this elastic element are as follows:

- Good resistance to all common lubricants and hydraulic fluids.
- Optimum mechanical properties.
- Green element suitable to operate for short periods up to 170 °C.

DIMENSIONING

For pre-selection of the coupling's size you can use the generic formula indicated on page 6. Alternatively it is possible to determine the coupling's nominal torque using several correction factors:

$$C_{nom} > C_{mot} \cdot f \cdot K \cdot f_T \cdot f_A$$

Where:

- C_{nom} = theoretic nominal torque of the coupling *[Nm]*
- C_{mot} = nominal torque motor side *[Nm]*
- f = service factor *(see page 5)*
- f_A = starting frequency factor *[Hz]*
- f_T = thermic factor
- K = shock factor

Shock factor (K)

1,2	= light shock
1,5	= medium shock
1,8	= hard shock

Thermic factor (f_T)

1	= -36 ÷ +60 °C
1,2	= 80 °C
1,4	= 100 °C
1,8	= 120 °C

Starting frequency factor (f_A)

1	= 0 ÷ 120 starting each hour
1,2	= 240 starting each hour
1,4	= 400 starting each hour
1,6	= 800 starting each hour
1,8	= 1600 starting each hour

Having completed and checked the coupling's choice, in accordance to the torque to be transmitted, it is necessary now, to take into consideration, the necessary flexibility comparing the misalignments allowed from the kind of coupling selected, with the real ones, seen by the shafts to be connected. It is important to consider that misalignments, axial, angular and parallel, must be considered paired together, as inversely proportional (one reduces when the other increases). If all types of misalignments occur, it is necessary that the sum in percentage respect to the maximum value doesn't exceed 100%.

FITTING

Specific procedures to assemble this coupling are not required.

1) Achieve radial and axial alignment as precisely as possible for maximum absorption of possible misalignments and the long life of the coupling.
2) Having pre-assembled the coupling, insert the external half-hub on one shaft. Check that the external parts of the two shafts don't exceed the relevant half-hub's surface (quote “N”) and fix this one to the shaft with its relevant fixing system.
3) Close the second shaft inserting it into the internal half-hub for a quantity not higher than the length of the bore (quote “N”). If the insertion should be difficult, due to an accentuated misalignment, it is advisable to release all the connection pins, this will allow for a higher flexibility between the two half-hubs.
4) After having inserted and fixed the hubs, take away each connection pin, damp them with loctite threadlocker, and reassemble and tighten them carefully in progressive way following a cross sequence.
5) Cover the pins with the protection band, making the holes of the band coincide with the relevant locking spheres.

GEC - compact elastic coupling: technical data

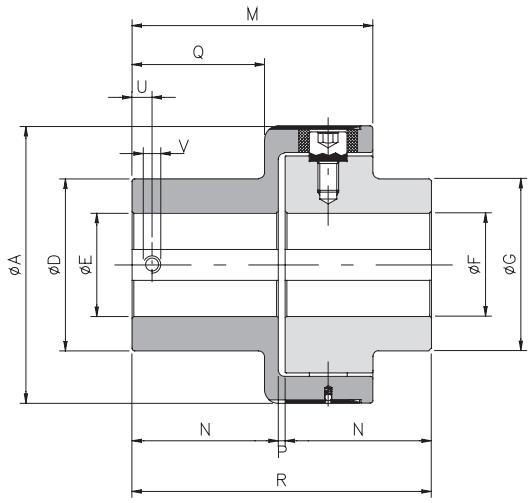

DIMENSIONS

Size	A	D	E H7		F H7		G	M	N	P	Q	R	U	V
			pilot	max	pilot	max								
00	63	42	5	20	5	20	42	52	25	2	18	52	8	M4
0	78	50	10	28	10	28	50	63,5	32	3,5	28	67,5	10	M5
1	108	70	12	38	12	38	70	89	49	4	44	102	12	M6
2	130	80	15	45	15	45	80	111	65	4	59	134	15	M8
3	161	100	15	60	15	60	100	140	85	4	77	174	15	M8
4	206	120	20	70	20	70	120	168	105	4	97	214	20	M10
5	239	135	30	80	30	80	135	201	130	4	120	264	20	M10
▲ **6**	315	215	40	150	40	110	175	260	165	5	150	335	25	M12
▲ **7**	364	240	40	180	40	140	210	310	205	5	185	415	25	M12

TECHNICAL CHARACTERISTICS

Size	Torque *[Nm]*		Weight *[Kg]*	Inertia *[Kgm²]*	Max speed *[Rpm]*	Operating temperature *[°C]*	Hardness elastic element *[Sh-A]*	Misalignments					
								Angular α *[°]*		Axial *X [mm]*		Radial *K [mm]*	
	nom	max						continuous	intermittent	continuous	intermittent	continuous	intermittent
00	35	50	0,8	0,00045	6000	-15 ÷ +150	74 ±3	1°	1° 30'	±0,7	± 1,5	0,5	0,7
0	70	110	1,5	0,00124	5500			1°	1° 30'	±0,7	± 1,5	0,5	0,7
1	280	420	4,2	0,00633	5000			0° 48'	1°	±0,7	± 1,5	0,5	0,7
2	570	860	7,7	0,01592	4500			0° 36'	0° 48'	±0,7	± 1,5	0,6	0,7
3	980	1500	14,2	0,04666	4000			0° 30'	0° 42'	±0,8	± 1,6	0,6	0,8
4	2340	3600	22,6	0,12546	3100			0° 24'	0° 30'	±0,8	± 1,6	0,6	0,8
5	3880	5800	36,0	0,26035	2800			0° 24'	0° 30'	±0,8	± 1,6	0,6	0,8
▲ **6**	15000	20000	78,1	0,88951	2000			0° 24'	0° 30'	±0,8	± 1,6	0,6	0,8
▲ **7**	30000	35000	128,4	1,77108	1500			0° 24'	0° 30'	±0,8	± 1,6	0,6	0,8

ORDER EXAMPLE

COMPACT ELASTIC COUPLING					
Model	Size	Bore 1	Locking type bore 1	Bore 2	Locking type bore 2
GEC	**Size 3**	**bore Ø35 H7**	**A1**	**bore Ø45 H7**	**A1**

Model	
GEC	compact elastic coupling

Size
from 00 to 7

Locking type
see hub connection type list at page 4

▲ On request

NOTES

- The weights refer to the coupling with minimum bore.
- Inertias refer to the coupling with maximum bore.
- **Choice and availability of different hub connection type see pages 4 and 5.**

ComInTec®

GEAR COUPLING

Up to 5000 Nm of torque and 125 mm bore

GD

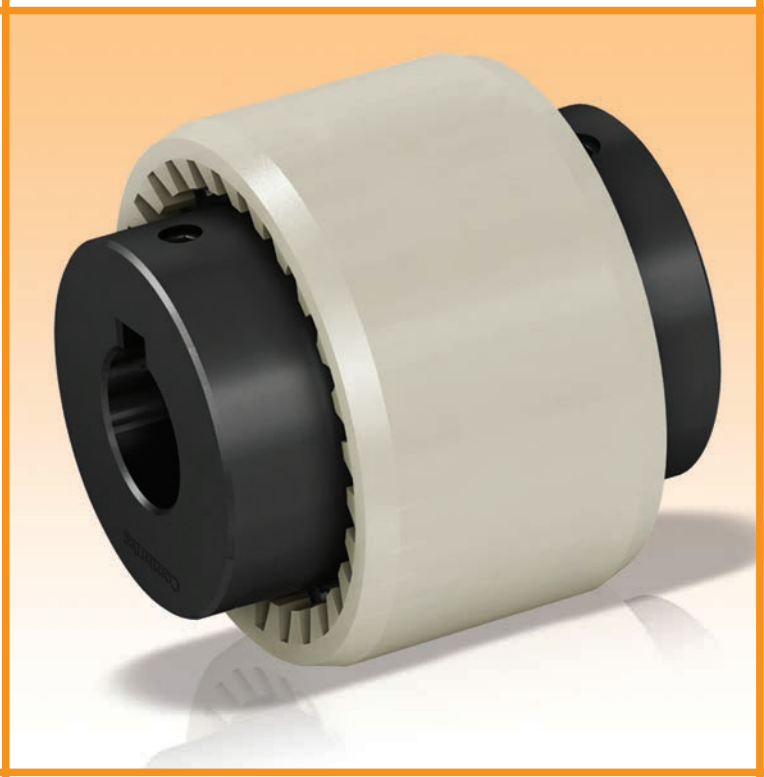

ComInTec®
Technology for Safety

GD - gear coupling: introduction

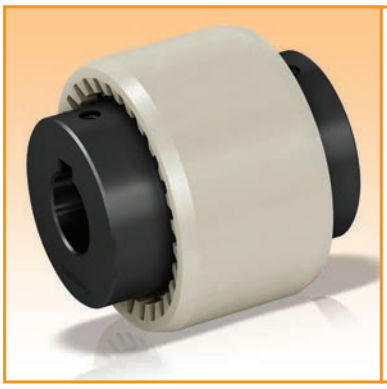

- Hubs made in steel fully turned with standard treatment of phosphating.
- Polyamide sleeve.
- Statically balanced.
- Maintenance and lubrication free.
- Compact and simple to be assembled.
- Vibrations dampening.

ON REQUEST
- Various hub connection type available.
- Version with sleeve in steel, circlip and seals.
- Version with sleeve directly integrated in one hub.
- Specific surface treatments possible.

The GD coupling is composed of two hubs in steel UNI EN 10083/98 fully turned, externally toothed with rounded profile and assembled only with a sleeve in polyamide stabilized resin, toothed internally.
Due to the tooth profile with which the hubs and the sleeve are connected, you can obtain a high contact surface also in presence of misalignments, in order to reduce the contact pressures and promote a longer life.
The connection polyamide/steel assures silent and reliable functioning, in absence of maintenance and lubrication.
This kind of coupling represents a reliable and economic kind of connection, for medium and big power industrial purposes.

DESCRIPTION OF THE SLEEVE

The standard sleeve is made in polyamide 6.6 stabilized resin and its properties are as follows:

- Resistant to all common lubricants and hydraulic fluids
- Suitable to operate in a continuous way on temperatures from -25°C up to 90°C and for short periods up to 125°C
- Optimum sliding properties
- High insulating capacities
- Optimum mechanical properties

DIMENSIONING

For pre-selection of the coupling's size you can use the generic formula indicated on page 6.
Having established the coupling's size to be used, it is possible to make other checks considering further parameters:

$$C_{nom} > C_{mot} \bullet f_T \bullet f_R$$

Considerando la coppia di spunto:

$$C_{nom} = C_{SM} \bullet \frac{J_{uti}}{J_{mot} + J_{uti}} \bullet K \bullet f_T \bullet f_A + C_{mot} \bullet f_T \bullet f_R$$

$$C_{nom} = C_{SU} \bullet \frac{J_{uti}}{J_{mot} + J_{uti}} \bullet K \bullet f_T \bullet f_A + C_{mot} \bullet f_T \bullet f_R$$

Where:

C_{nom} = nominal torque of the coupling *[Nm]*
C_{mot} = nominal torque motor side *[Nm]*
C_{max} = maximum torque of the coupling *[Nm]*
C_{SU} = starting torque motor side *[Nm]*
C_{SM} = starting torque motor side [Nm]
f_A = starting frequency factor
f_R = thermic factor
f_T = inertia motor side
J_{mot} = inertia motor side [Kgm²]
J_{uti} = inertia user side [Kgm²]
K = shock factor

thermic factor (f_T)
1 = -40 ÷ +60 °C
1,2 = +70 °C
1,4 = +80 °C
1,6 = +90 °C

Shock factor (K)
1 = light shock
1,5 = medium shock
1,8 = hard shock

Starting frequency factor (f_A)
1 = 0 ÷ 120 starting each hour
1,2 = 240 starting each hour
1,4 = 400 starting each hour
1,6 = 800 starting each hour
1,8 = 1600 starting each hour

It is important to consider that misalignments, axial, angular and parallel, must be considered paired together, as inversely proportional (one reduces when the other increases). If all types of misalignments occur then it is necessary that the sum in percentage respect to the maximum value doesn't exceed 100%.

FITTING

Specific procedures to assemble this coupling are not required.
1) Achieve radial and axial alignment as precisely as possible to have the maximum absorption of possible misalignments and longer life of the coupling.
2) Having pre-assembled the coupling, insert the external half-hub on one shaft. Check that the external parts of the two shafts don't exceed the relevant half-hub's surface (quote “N”) and fix this one to the shaft with its relevant fixing system.
3) Insert the sleeve on the two half-hubs being careful to respect the distance of the same half-hubs, quote “P” on the catalogue.
4) Before starting transmission be sure that the sleeve can move freely.

GD - gear coupling: technical data

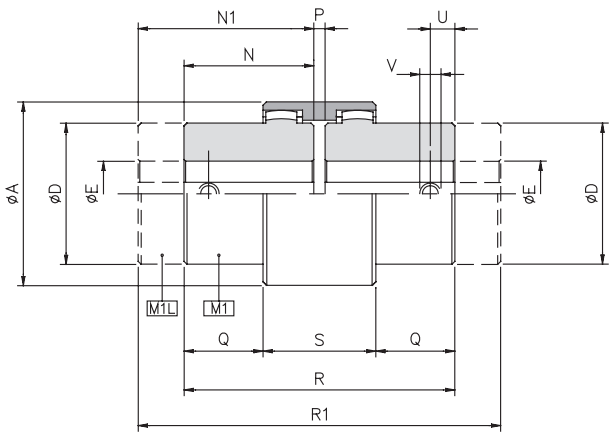

DIMENSIONS

Size	A	D	E H7		N	N1	P	Q	R	R1	S	U	V
			pilot	max									
1 (14)	40	24	-	14	23	40	4	6,5	50	84	37	6	M5
2 (19)	48	30	-	19	25	40	4	8,5	54	84	37	6	M5
3 (24)	52	36	-	24	26	50	4	7,5	56	104	41	6	M5
4 (28)	66	44	-	28	40	55	4	19	84	114	46	10	M8
5 (32)	76	50	-	32	40	55	4	18	84	114	48	10	M8
6 (38)	83	58	-	38	40	60	4	18	84	124	48	10	M8
7 (42)	92	65	-	42	42	▲ 60	4	19	88	▲ 124	50	10	M8
8 (48)	95	67	-	48	50	▲ 60	4	27	104	▲ 124	50	10	M8
9 (55)	114	82	-	55	52	▲ 65	4	29,5	108	▲ 134	58	20	M10
10 (65)	132	96	-	65	55	▲ 70	4	36	114	▲ 144	68	20	M10
▲ **11 (80)**	175	124	25	80	90	-	6	46,5	186	-	93	20	M10
▲ **12 (100)**	210	152	35	100	110	-	8	63	228	-	102	30	M12
▲ **13 (125)**	270	192	45	125	140	-	10	78	290	-	134	40	M16

TECHNICAL CHARACTERISTICS

Size	Torque *[Nm]*		Weight *[Kg]*			Inertia *[Kgm²]*			Max speed *[Rpm]*	Operating temperature *[°C]*	Misalignments		
	nom	max	M1	M1L	Manicotto	M1	M1L	Manicotto			Angular α *[°]*	Axial *X* *[mm]*	Radial *K* *[mm]*
1 (14)	11,5	23	0,10	0,13	0,022	0,000010	0,000013	0,000007	14000	-25 ÷ +80	2°	±1	±0,3
2 (19)	18,5	36,5	0,18	0,28	0,028	0,000018	0,000032	0,000013	11800		2°	±1	±0,4
3 (24)	23	46	0,23	0,42	0,037	0,000036	0,000076	0,000020	10600		2°	±1	±0,4
4 (28)	51,5	103,5	0,54	0,73	0,086	0,000122	0,000187	0,000068	8500		2°	±1	±0,5
5 (32)	69	138	0,66	0,90	0,104	0,000207	0,000328	0,000116	7500		2°	±1	±0,5
6 (38)	88	176	0,93	1,42	0,131	0,000394	0,000787	0,000171	6700		2°	±1	±0,4
7 (42)	110	220	1,10	1,46	0,187	0,000510	0,001223	0,000286	6000		2°	±1	±0,4
8 (48)	154	308	1,50	1,83	0,198	0,000744	0,001445	0,000327	5600		2°	±1	±0,4
9 (55)	285	570	2,30	3,26	0,357	0,001962	0,003378	0,000741	4800		2°	±1	±0,6
10 (65)	420	840	3,17	3,95	0,595	0,004068	0,007586	0,001519	4000		2°	±1	±0,6
▲ **11 (80)**	700	1400	8,40	-	1,130	0,015292	-	0,006471	3150		2°	±1	±0,7
▲ **12 (100)**	1200	2400	15,37	-	1,780	0,040213	-	0,015696	3000		2°	±1	±0,8
▲ **13 (125)**	2500	5000	31,19	-	3,880	0,137141	-	0,054469	2120		2°	±1	±1,1

▲ On request

NOTES

- The weights refer to the coupling with minimum bore.
- Inertias refer to the coupling with maximum bore.
- **For choice and availability of different hub connection type see pages 4 and 5.**

GD - gear coupling: additional information

ORDER EXAMPLE

GEAR COUPLING						
Model	Size	Version	Bore 1	Locking type bore 1	Bore 2	Locking type bore 2
GD	**size 8**	**M1 - M1**	**bore Ø40 H7**	**A1**	**bore Ø40 H7**	**A1**

Model	
GD	gear coupling

Size
From 1 to 13

Version
M1 - M1
M1 - M1L
M1L - M1
M1L - M1L

Locking type
see hub connection type list at page 4

FLEXIBLE COUPLING

Up to 5.100 Nm of torque and 85 mm bore

GF

ComInTec®
Technology for Safety

GF - flexible coupling: technical data

- Made in steel fully turned with standard treatment of phosphating.
- Simple manufacturing.
- High angular misalignments possible.
- Elastic element with an internal nylon weave for high reliability.
- Possible to maintain without the need to move the hubs.
- Finished bore (in ISO H7 tolerance) with keyway (in ISO H9 tolerance), and low roughness.

ON REQUEST

- Various hub connection type available.
- Specific surface treatments.
- Customized versions for specific needs.
- Connection to the Torque limiter's (safety coupling) range possible.

The GF coupling, even if being built simply, assures a high elastic reliability which allows the recovery of high angular misalignments (up to 5°), absolutely reducing the drive irregularities.
It is composed of two hubs in steel UNI EN10083/98 fully turned and by an elastomeric central ring connected with screws and bolts in alternate way in respect to the two hubs.
For pre-selection of the coupling's size you can use the generic formula indicated on page 6.

DIMENSIONS

Size	A	B	C	D	E H7		N	P	Q	R	U	V
					pilot	max						
X 0	98	100	78	48	10	28	45	17	34	107	8	M4
X 1	128	130	100	70	14	38	55	24	44	134	12	M6
X 2	162	165	125	90	19	48	72	29	56	173	12	M6
X 3	178	185	140	105	19	55	76	36	60	188	15	M8
X 4	198	205	160	125	28	65	84	44	68	212	15	M8
X 5	235	240	195	155	30	85	100	50	80	250	15	M8

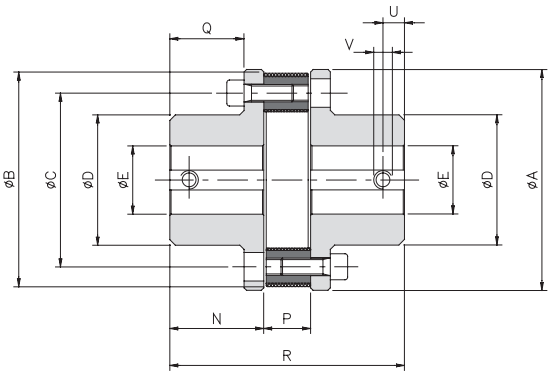

TECHNICAL CHARACTERISTICS

Size	Torque [Nm]		Weight [Kg]	Inertia [Kgm²]	Max speed [Rpm]	Misalignments			Elastic element		
	Nom	Max				angular α [°]	axial X [mm]	radial K [mm]	Hardness [Sh-A]	Operating temperature [°C]	Maximum temperature [°C]
X 0	75	225	3,4	0,00256	5000	3°	1,5	1	70 ± 5	-25 ÷ +70	+130
X 1	230	690	6,0	0,00826	4500	4°	2	1			
X 2	470	1410	8,2	0,02654	3600	4°	2,5	1,5			
X 3	750	2250	12,7	0,04268	3500	4°	3	1,5			
X 4	1125	3375	16,9	0,07775	2800	4°	3	1,5	60 ± 5		
X 5	1700	5100	22,2	0,19375	2500	4°	3,5	1,5			

ORDER EXAMPLE

FLEXIBLE COUPLING					
Model	Size	Bore 1	Locking type bore 1	Bore 2	Locking type bore 2
GF	**Size X3**	**bore Ø35 H7**	**A1**	**bore Ø45 H7**	**A1**

Model		Size	Locking type
GF	flexible coupling	From X0 to X5	see hub connection type list at page 4

NOTES

▲ On request

- The weights refer to the coupling with minimum bore.
- Inertias refer to the coupling with maximum bore.
- **For choice and availability of different hub connection type see pages 4 and 5.**

CHAIN COUPLING

Up to 8.000 Nm of torque and 110 mm bore

GC

ComInTec®
Technology for Safety

GC - chain coupling: technical data

- Made in steel fully turned with standard treatment of phosphating.
- Negligible power loss, absorbed by the coupling.
- Simple manufacturing.
- Hardening of hub teeth.
- Optimum quality / price ratio.
- Maintenance without moving the hubs axially.

ON REQUEST

- Various hub connection type available on the hubs.
- Specific surface treatments.
- Customized versions for specific needs.
- Connection to the Torque limiter's (safety coupling) range possible.

The chain coupling GC consists of two steel sprockets, machined and connected by a double chain. The manufacture of the coupling completely in steel allows to use at high temperatures and reduce the loss of power between the driving and driven.

DIMENSIONS

Size	A	D	E H7		N	P	R	U	V
			pilot	max					
01	45	25	8	12	9	13	31	4	M3
00	57	37	10	20	20	21	61	5	M3
0	75	50	12	28	19	23,5	61,5	8	M4
1	101	70	16	38	29	29	87	12	M6
2	126	89	20	55	38	32	108	12	M6
3	159	112	20	70	56	24,5	142,5	15	M8
4	183	130	28	80	59	37	155	15	M8
5	216	130	30	80	88	40	216	15	M8
6	291	150	40	90	103	46	252	25	M10
7	310	170	50	110	124	46	295	25	M10

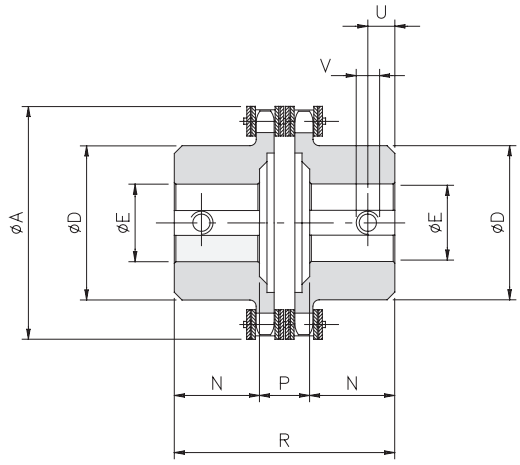

TECHNICAL CHARACTERISTICS

Size	Max torque *[Nm]*	Pitch (double chain) ISO-R 606	Weight *[Kg]*	Inertia *[Kgm²]*	Max speed *[Rpm]*	Misalignments		
						Angular α *[°]*	Axial *X [mm]*	Radial *K [mm]*
01	140	3/8" x 7/32" z12	0,2	0,00002	6000	2°	1,50	0,20
00	190	3/8" x 7/32" z16	0,6	0,00009	5000		1,50	0,20
0	600	3/8" x 7/32" z22	1,0	0,00030	3800		1,50	0,20
1	700	1/2" x 5/16" z22	2,7	0,00148	2800		2,40	0,25
2	1400	3/4" x 7/16" z18	5,4	0,00497	2200		3,20	0,30
3	2500	1" x 17,02 z17	11,8	0,01817	1800		4,50	0,35
4	3200	1" x 17,02 z20	16,9	0,03530	1500		4,80	0,40
5	4000	1" x 17,02 z24	19,5	0,05333	1300		4,80	0,40
6	7000	1" 1/4 x 3/4" z26	42,5	0,19027	1000		6,30	0,50
7	8000	1" 1/4 x 3/4" z28	58,6	0,28643	900		6,30	0,50

ORDER EXAMPLE

CHAIN COUPLING					
Model	Size	Bore 1	Locking type bore 1	Bore 2	Locking type bore 2
GC	**size 6**	**bore Ø80 H7**	**A1**	**bore Ø70 H7**	**A1**

Model		Size	Locking type
GC	chain coupling	From 01 to 7	see hub connection type list at page 4

NOTES

- The weights refer to the coupling with minimum bore.
- Inertias refer to the coupling with maximum bore.
- **For choice and availability of different hub connection type see pages 4 and 5.**

ComInTec® IDENTIFICATION

LABEL

At ComInTec, as an element identifier for each group, we apply a sticker which shows all relevant information required for the traceability of the group and of the same production batch. This is necessary and indispensable to simplify the information needs of spare parts or the reordering of the same group. For some products, a plasticized green sticker is used with indelible ink, applied directly to the group. For other models it is a white adhesive label with thermal transfer ink applied on the packaging of the group.

Example:

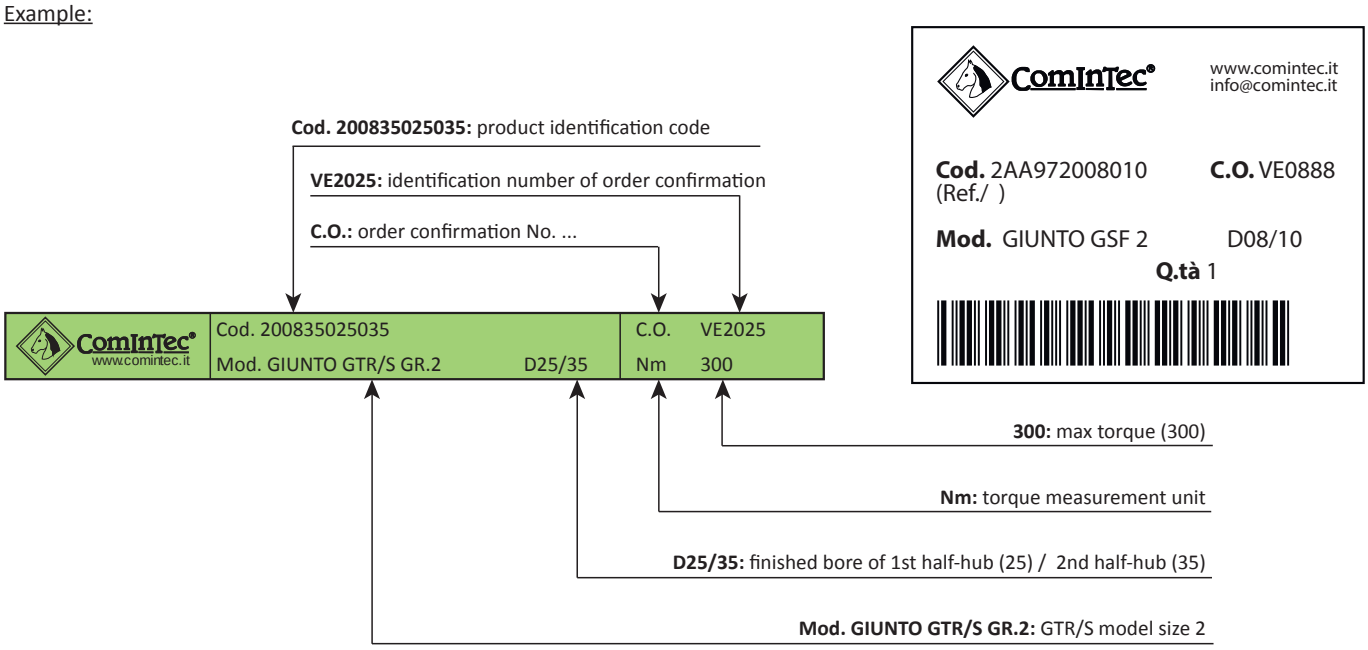

MARKING

Example:

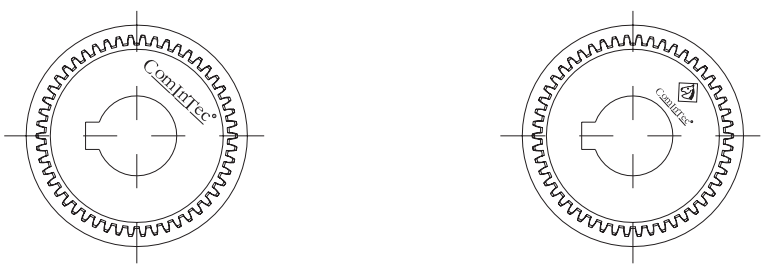

ComInTec® CERTIFICATION

- Certified company since february 1996 according to **UNI EN ISO 9001**.
- Company and production completely **"Made in Italy"**.
- **ABS certification** to use in the naval sector.
- Continuous product research and development, some of them with **Italian and European patent**.
- Internal and external environment protection complying with **directive 2002/95/CE (RoHS)**, that forbids the use of harmful substances during the production progress or in the end product, and complying with D.Lgs. 626/94 for security and health at work.
- Maximum attention to market requests for **conformity with 94/9/CE (ATEX)** for use in potentially explosive environments.
- **European Power Transmission Distributors Association (EPTDA).** The largest organisation of distributors and manufacturers of power transmission and motion control products in Europe.
- **REACH (CE) conformity No.1970/2006.**

PROJECT REQUEST

Your needs are our priorities

If you need help with a project, ask for assistance or advice from the experts at ComInTec.
Simply fill out this form and send it by e-mail to tecnico@comintec.it. Your request will be met with the utmost speed.

General informations:

- Company name: _
- City / State: _
- Name / Surname: _
- Title: _
- Phone: _
- E-mail / website: _
- Quantity: _
- Planned yearly quantities: _
- Target price: _

Use:

- OEM name / website: _____
- Application field / Type of machine: _____
- Where it is applied: _____
- Model currently used: _____
- Nominal torque (Nm): _____
- Speed (Rpm): _____
- Workplace:
  - ☐ Clean
  - ☐ Dusty
  - ☐ Humid / Wet
  - ☐ Other _____
- Kind of coupling: _____
- Driving shaft diameter (mm): _____
- Driving shaft connection type:
  - ☐ Keyway
  - ☐ Locking assembly
  - ☐ Spline (identification _____)
  - ☐ Other _____

- Driven shaft diameter (mm): _____

- Driven shaft connection type:
  - ☐ Keyway
  - ☐ Locking assembly
  - ☐ Spline (identification _____)
  - ☐ Altro _____

- Notes: _____

_____

_____

EVENTUAL ASSEMBLY WITH TORQUE LIMITER (SAFETY COUPLING)

- What it protects: _____

- Re-engagement position:
  - ☐ Equidistant
  - ☐ 360°
  - ☐ Not important
  - ☐ Other _____

- Electric signal of overload required:
  - ☐ Yes
  - ☐ No

- Notes: _____

_____

_____

_____

_____

_____

Signature

_ _

PLEASE DO SEND OR ATTACH A DRAWING OR PHOTOGRAPH WITH YOUR ENQUIRY AS THIS CAN HELP US TO BETTER UNDERSTAND YOUR APPLICATION.

NOTES

ComInTec Srl reserves the right to discontinue the production of any model and/or to change specifications or designs at any time without notice and without incurring obligations.
The data given in this catalog are indicative and not binding. The torque values listed in the catalog refer to static testing performed in "normal" conditions.
These values can be subject to change, depending on the working parameters and environmental conditions.

This catalog cancels and replaces all previous ones.

SKSSWEDEN

www.comintec.it

PRODUCTION PROGRAM

Made in Italy

TORQUE LIMITERS
(safety couplings)

CLUTCHES

FLEXIBLE COUPLINGS - RIGID COUPLINGS
(backlash free)

LOCKING RINGS

VARIABLE PULLEYS - MOTOR SLIDE BASES

ComInTec®

ComInTec srl - Via Dell'Artigiano, 9 - 40055 Villanova di Castenaso (Bologna) - Tel. +39 051 780216 - Fax +39 051 782256 - info@comintec.it - www.comintec.it

Edition 10/2014