GSR

LM Guide Separate Type (Radial) Model GSR

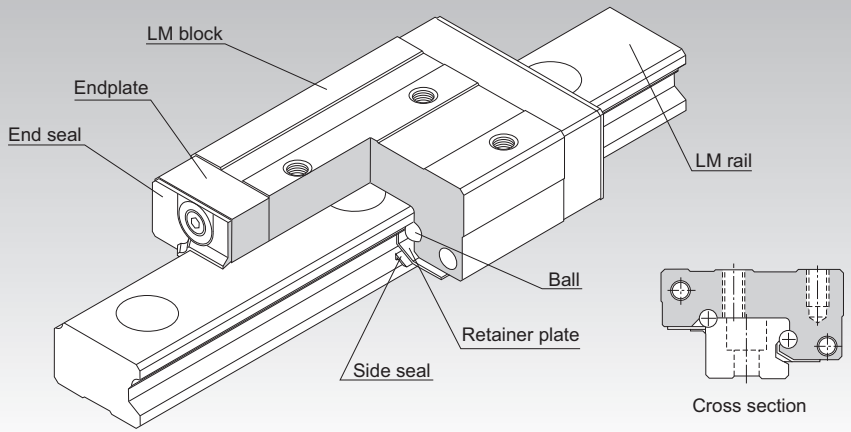

Point of Selection	**A1-10**
Point of Design	**A1-432**
Options	**A1-455**
Model No.	**A1-520**
Precautions on Use	**A1-526**
Accessories for Lubrication	**A24-1**
Mounting Procedure and Maintenance	**B1-89**
Equivalent moment factor	**A1-43**
Rated Loads in All Directions	**A1-58**
Equivalent factor in each direction	**A1-60**
Example of Clearance Adjustment	**A1-275**
Accuracy Standards	**A1-81**
Shoulder Height of the Mounting Base and the Corner Radius	**A1-446**
Permissible Error of the Mounting Surface	**A1-449**
Dimensions of Each Model with an Option Attached	**A1-467**

Structure and Features

Balls roll in two rows of raceways precision-ground on an LM rail and an LM block, and endplates incorporated in the LM block allow the balls to circulate. Since retainer plates hold the balls, they do not fall off.
As the top face of the LM block is inclined, a clearance is eliminated and an appropriate preload is applied simply by securing the LM block with mounting bolts.
Model GSR has a special contact structure using circular-arc grooves. This increases self-adjusting capability and makes GSR an optimal model for places associated with difficulty establishing high accuracy and for general industrial machinery.
* Model GSR cannot be used in single-axis applications.

[Interchangeability]
Both the LM block and LM rail are interchangeable and can be stored separately. Therefore, it is possible to store a long-size LM rail and cut it to a desired length before using it.

[Compact]
Since model GSR has a low center of gravity structure with a low overall height, the machine can be downsized.

[Capable of Receiving a Load in any Direction]
The ball contact angle is designed so that this model can receive a load in any direction. As a result, it can be used in places where a reverse radial load, lateral load or a moment in any direction is applied.

Types and Features

Model GSR-T

Specification Table⇒A1-276

This model is a standard type.

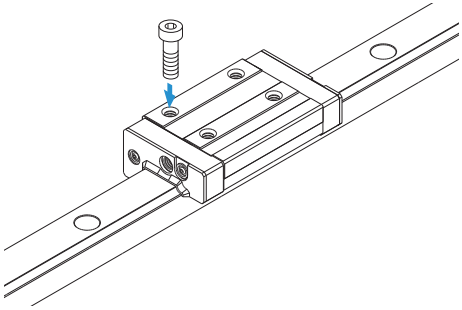

Model GSR-V

Specification Table⇒A1-276

A space-saving type that has the same cross-sectional shape as GSR-T, but has a shorter overall LM block length (L).

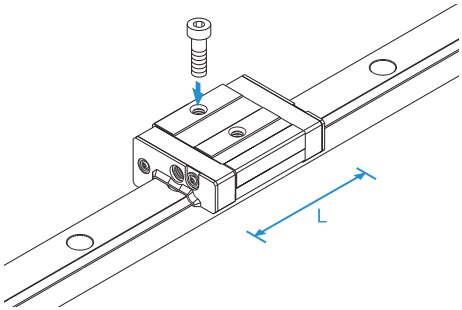

Example of Clearance Adjustment

By providing a shoulder maybe on the side face of each LM block and pressing either LM block with a bolt, a preload is applied and the rigidity is increased.

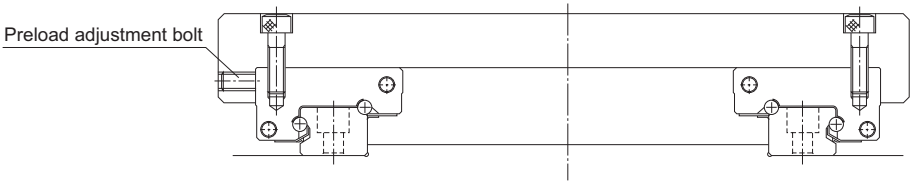

Fig.1 Example of Adjusting a Preload with a Push Bolt

Models GSR-T and GSR-V

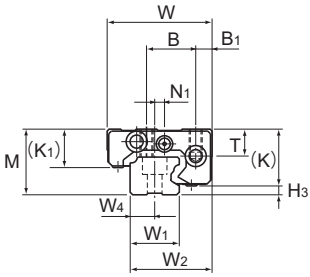

Model GSR15T/V

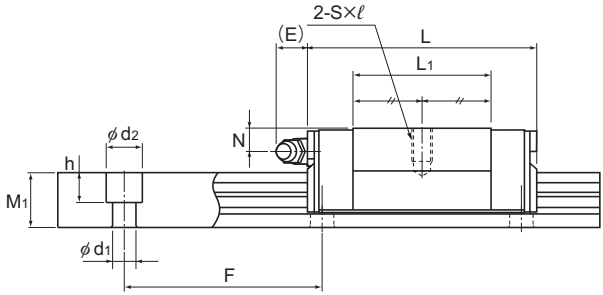

Models GSR15 to 25V

Model No.	Outer dimensions			LM block dimensions												
	Height M	Width W	Length L	B_1	B	C	S×ℓ	L_1	T	K	K_1	N	N_1	E	Grease nipple	H_3
GSR 15V GSR 15T	20	32	47.1 59.8	5	15	— 26	M4×7	27.5 40.2	8.25	16.8	12	4.5	3	5.5	PB107	3.2
GSR 20V GSR 20T	24	43	58.1 74	7	20	— 30	M5×8	34.3 50.2	9.7	20.6	13.6	5	—	12	B-M6F	3.4
GSR 25V GSR 25T	30	50	69 88	7	23	— 40	M6×10	41.2 60.2	12.7	25.4	16.8	7	—	12	B-M6F	4.6
GSR 30T	33	57	103	8	26	45	M8×12	70.3	14.6	28.5	18	7	—	12	B-M6F	4.5
GSR 35T	38	68	117	9	32	50	M8×15	80.3	15.6	32.5	20.5	8	—	12	B-M6F	5.5

Model number coding

Combination of LM rail and LM block

GSR25 T 2 UU +1060L H T K

- GSR25: Model number
- T: Type of LM block
- 2: No. of LM blocks used on the same rail
- UU: Contamination protection accessory symbol (*1)
- +1060L: LM rail length (in mm)
- H: Accuracy symbol (*2) Normal grade (No Symbol)/High accuracy grade (H) Precision grade (P)
- T: Symbol for LM rail jointed use
- K: Symbol for tapped-hole LM rail type

(*1) See contamination protection accessory on A1-492. (*2) See A1-81.

Note) One set of model GSR: This model number indicates that a single-rail unit constitutes one set.

To download a desired data, search for the corresponding model number in the Technical site. https://tech.thk.com

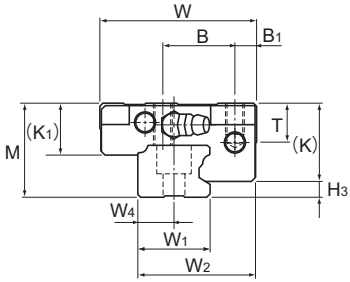

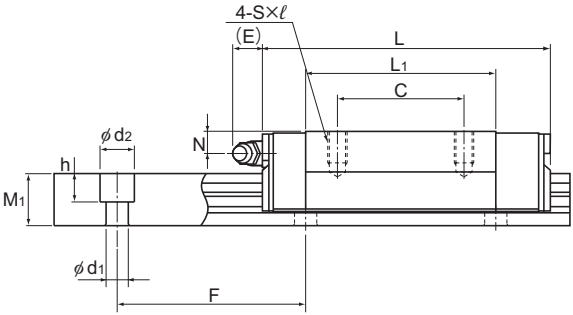

Models GSR20 to 35T, Models GSR20V and 25V

Models GSR15 to 35T

Unit: mm

	LM rail dimensions							Basic load rating		Static permissible moment kN-m*				Mass	
	Width			Height	Pitch		Length*	C	C_0	M_A		M_B		LM block	LM rail
	W_1	W_2	W_4	M_1	F	$d_1 \times d_2 \times h$	Max	kN	kN	1 block	Double blocks	1 block	Double blocks	kg	kg/m
	15	25	7.5	11.5	60	4.5×7.5×5.3	2000	4.31 5.69	5.59 8.43	0.0252 0.0525	0.158 0.292	0.0218 0.0452	0.136 0.252	0.08 0.13	1.2
	20	33	10	13	60	6×9.5×8.5	3000	7.01 9.22	8.82 13.2	0.0498 0.102	0.307 0.564	0.0431 0.0885	0.265 0.486	0.17 0.25	1.8
	23	38	11.5	16.5	60	7×11×9	3000	10.29 13.5	12.65 19	0.0858 0.177	0.522 0.965	0.0742 0.152	0.451 0.831	0.29 0.5	2.6
	28	44.5	14	19	80	9×14×12	3000	18.8	25.9	0.282	1.54	0.243	1.32	0.6	3.6
	34	54	17	22	80	11×17.5×14	3000	25.1	33.8	0.421	2.28	0.362	1.96	1	5

Note) A moment in the direction M_C can be received if two rails are used in parallel. However, since it depends on the distance between the two rails, the moment in the direction M_C is omitted here.
The maximum length under "Length*" indicates the standard maximum length of an LM rail. (See A1-278.)
Static permissible moment*: 1 block: static permissible moment value with 1 LM block
Double blocks: static permissible moment value with 2 blocks closely contacting with each other
Clients who require wall-mounted installations or oil lubrication should contact THK.

Model number coding

LM block

GSR25 T UU

- GSR25: Model number
- T: Type of LM block
- UU: Contamination protection accessory symbol (*1)

LM rail

GSR25 -1060L H K

- GSR25: Model number
- -1060L: LM rail length (in mm)
- H: Accuracy symbol (*2)
  Normal grade (No Symbol)
  High accuracy grade (H)
  Precision grade (P)
- K: Symbol for tapped-hole LM rail type

(*1) See contamination protection accessory on A1-492. (*2) See A1-81.

Options⇒A1-455

Standard Length and Maximum Length of the LM Rail

Table1 shows the standard lengths and the maximum lengths of model GSR variations.
In case the required quantity is large and the lengths are not the same, we recommend preparing an LM rail of the maximum length in stock. This is economical since it allows you to cut the rail to the desired length as necessary.

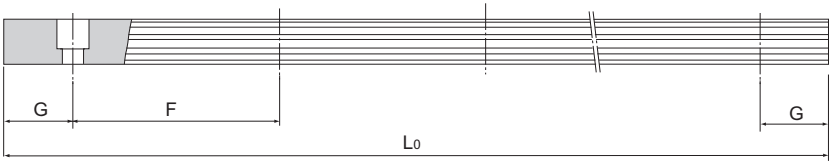

Table1 Standard Length and Maximum Length of the LM Rail for Model GSR

Unit: mm

Model No.	GSR 15	GSR 20	GSR 25	GSR 30	GSR 35
LM rail standard length (L_0)	460 820 1060 1600	460 820 1060 1600	460 820 1060 1600	1240 1720 2200 3000	1240 1720 2200 3000
Standard pitch F	60	60	60	80	80
G	20	20	20	20	20
Max length	2000	3000	3000	3000	3000

Note) The maximum length varies with accuracy grades. Contact THK for details.

Tapped-hole LM Rail Type of Model GSR

- Since the bottom of the LM rail has a tapped hole, this model can easily be installed on an H-shape steel and channel.
- Since the top face of the LM rail has no mounting hole, the sealabilitiy is increased and entrance of foreign material (e.g., cutting chips) can be prevented.

(1) Determine the bolt length so that a clearance of 2 to 3 mm is secured between the bolt end and the bottom of the tap (effective tap depth).
(2) As shown in Fig.2, a tapered washer is also available that allows GSR to be mounted on a section steel.
(3) For model number coding, see A1-276 to A1-277.

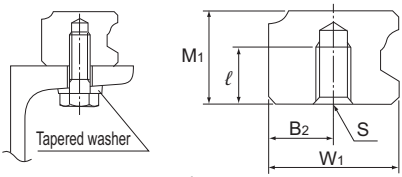

Fig.2

Table2 Tap Position and Depth Shape

Model No.	W_1	B_2	M_1	S×ℓ
GSR 15	15	7.5	11.5	M4×7
GSR 20	20	10	13	M5×8
GSR 25	23	11.5	16.5	M6×10
GSR 30	28	14	19	M8×12
GSR 35	34	17	22	M10×14

SKSSWEDEN